QUICK GUIDE
HYBRID INVERTER 5-20-ZSS

1. INSTALLATION AND DISTANCES

Always wear protective clothing and/or personal protective equipment	Always consult the manual	General notice - Important Safety Instructions

Maximum height from the ground allowed 180 cm

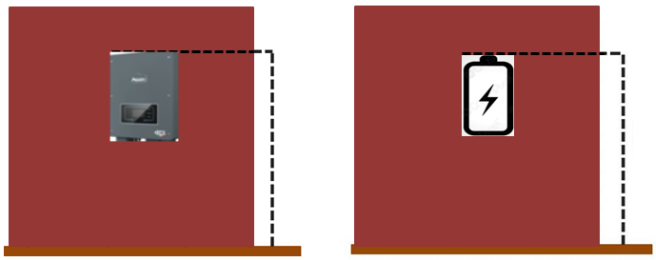

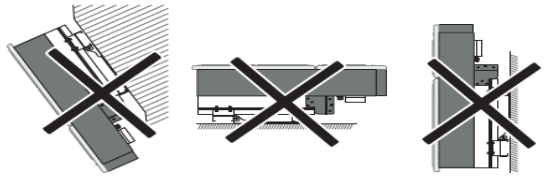

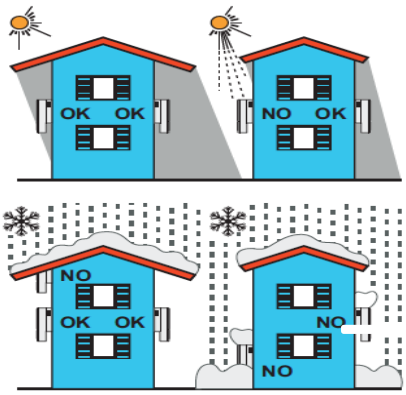

Correct installation in vertical position

Maximum inclination permitted: 15°

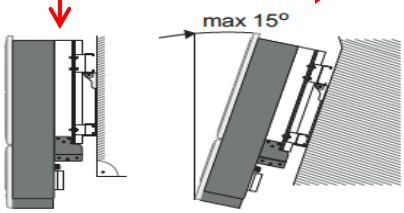

Distances for the installation of multiple inverters

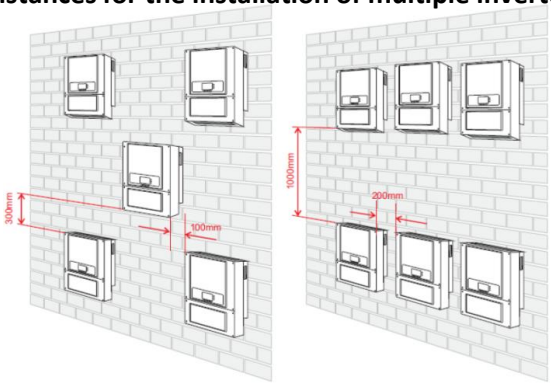

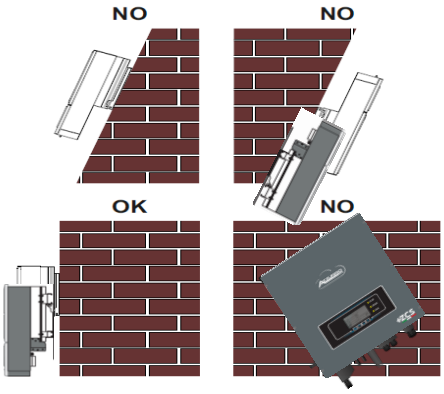

Distances for the installation of an individual inverter

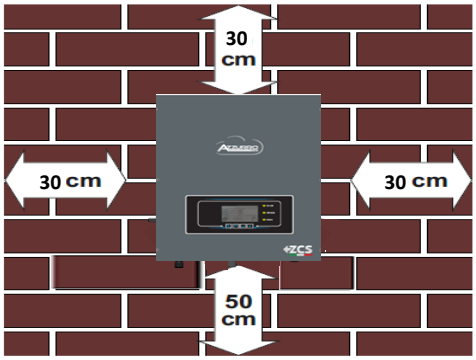

2. WIRING DIAGRAM FOR HYBRID STORAGE INVERTER

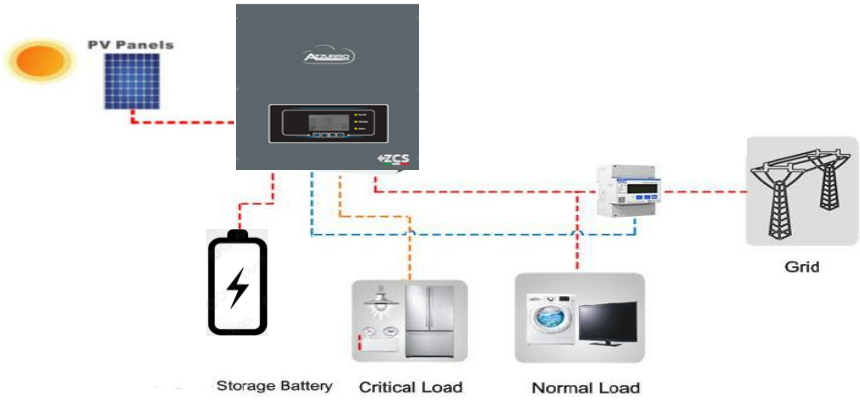

Note: If the hybrid inverter is to be installed under different conditions from those shown in the diagrams above, contact technical support to check whether it is feasible.

3. LIGHTS AND BUTTONS

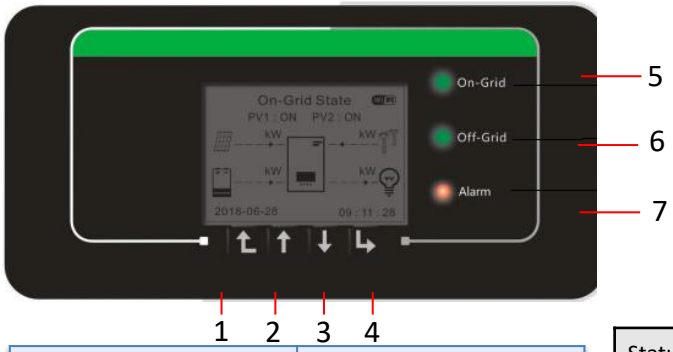

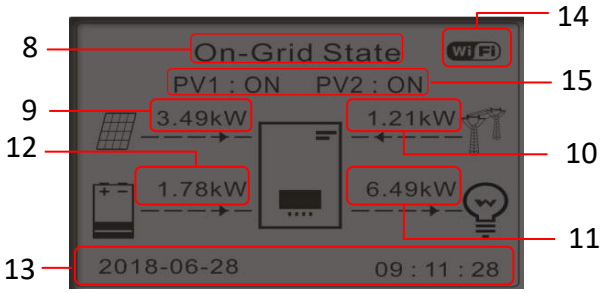

1. Menu/Back	8. System status
2. Up	9. PV production
3. Down	10. Grid power
4. Enter/Forward	11. Home consumption
5. On-grid Status	12. Battery power
6. Off-grid Status	13. Date and time
7. Alarm status	14. Wi-Fi signal
	15. PV system status

Status of the HYD-ES inverter	On-Grid Green light	Off-Grid Green light	Alarm Red light
On-Grid	On		
Standby (On-Grid)	Intermittent		
Off-Grid		On	
Standby (Off-Grid)		Intermittent	
Alarm			On

4. MAIN MENU

From the main menu, press "Menu/Back" to enter the main menu.
The main menu contains five different sections:

Main menu
1. Basic settings
2. Advanced settings
3. Event list
4. System Info
5. Software Update
6. Energy statistics

1. Basic settings

1. Language
2. Date and Time
3. Safety parameters
4. Working mode
5. Self-test
6. Channel config. input
7. EPS Mode
8. Commun. Address. Select.

2. Advanced settings **PWD: 0001**

1. Battery parameters
2. Battery active
3. Zero grid feed-in mode
4. IV Curve Scan
5. Logic interface
6. Factory reset
7. Parallel settings
8. Reset Bluetooth
9. CT Calibration

3. Event list

1. List of current events
2. List of historical events

4. System Info

1. Inverter Info
2. Battery Info
3. Safety parameters

5. SW Update **PWD: 0715**

Start Update ...

6.Energy Statistics

Today	Week	Month	Year	Life Cycle
PV prod.	PV prod.	PV prod.	PV prod.	PV prod.
AutoCon	AutoCon	AutoCon	AutoCon	AutoCon
Export	Export	Export	Export	Export
Consumption	Consumption	Consumption	Consumption	Consumption
AutoCon	AutoCon	AutoCon	AutoCon	AutoCon
Import	Import	Import	Import	Import

5. QUICK INFO ON SYSTEM STATUS

Press the "↓" key once from the main menu to access the instantaneous information on the battery and AC grid.

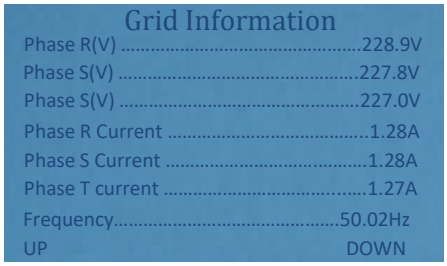

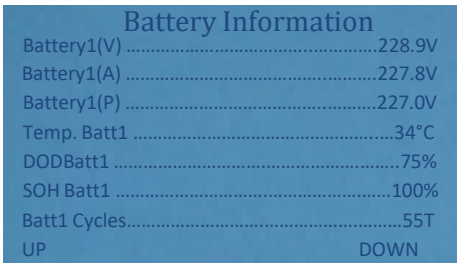

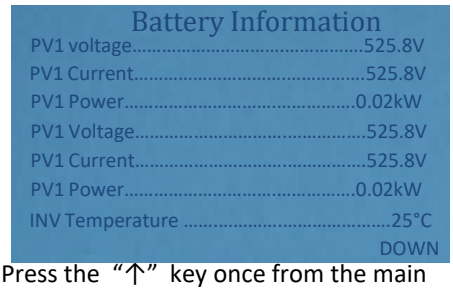

Press the "↑" key once from the main menu to access the instantaneous information on the DC side of the inverter.

6. OPERATING STATUSES IN AUTOMATIC MODE

Charge

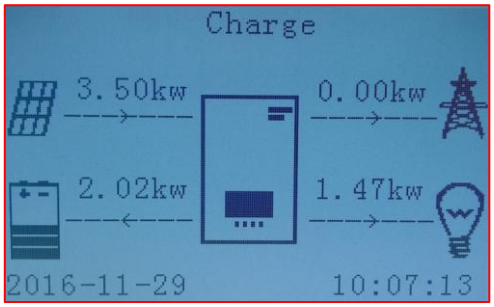

When the power produced from the photovoltaic system is greater than the energy required by the loads, the hybrid inverter will charge the battery with the excess energy.

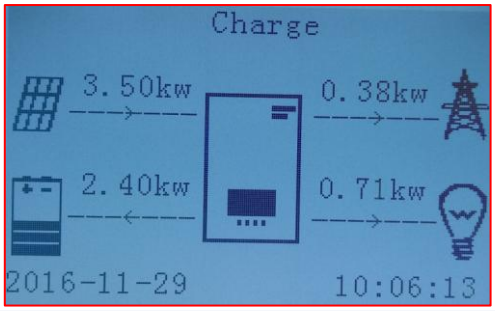

When the battery is fully charged, or when the charging power is limited (to preserve the integrity of the battery), the excess energy will be exported to the grid.

Discharge

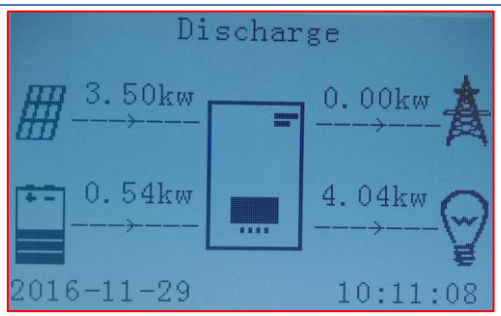

When the power of the photovoltaic system is once again less than the power required by the loads, the system will use the energy stored in the battery to power the domestic utilities.

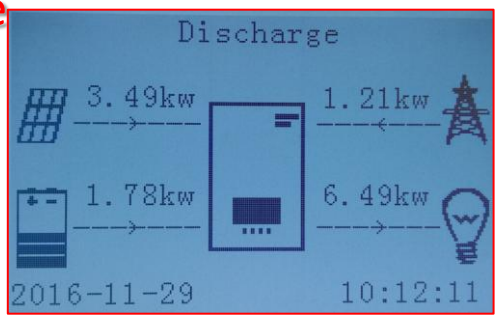

When the sum of the power produced by the photovoltaic system and supplied by the battery is less than that required by the loads, the missing energy will be taken from the grid.

Standby

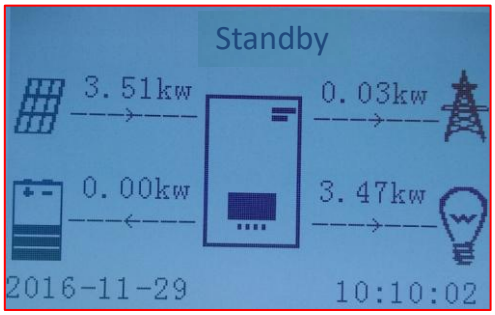

The hybrid inverter will remain in Standby until:

- the difference between the photovoltaic production and the power required by the loads is less than 100W
- the battery is fully charged and the photovoltaic production is higher than the consumption (with tolerance of 100W)
- the battery is flat and the photovoltaic production is lower than the consumption (with tolerance of 100W)

7. QUICK INFO ON SYSTEM STATUS

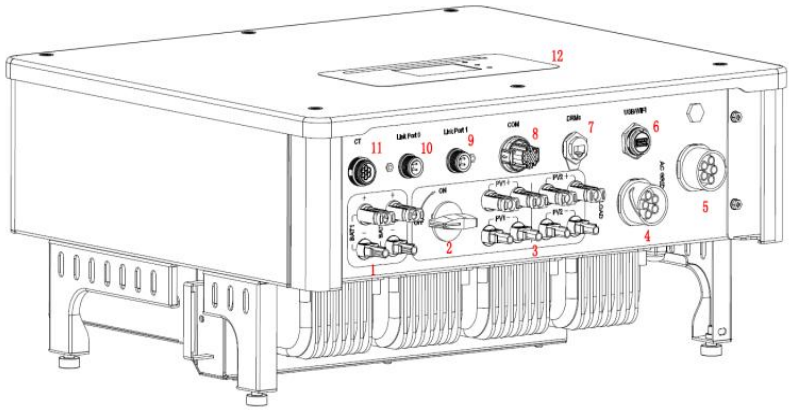

1	Battery input terminals	7	DRMs
2	DC Switch	8	COM
3	PV input terminals	9	Port 1 for parallel connection
4	Privileged load connection port	10	Port 0 for parallel connection
5	Grid connection port	11	CT (current sensors)
6	USB/Wi-Fi	12	LCD

8. PHOTOVOLTAIC CONNECTION

Recommended specifications for DC input cables

Cross-sectional area (mm^2)		Outer diameter of cable (mm^2)
Range	Recommended value	
4.0~6.0	4.0	4.5~7.8

Procedure:

1) Prepare the positive and negative photovoltaic cables.

1. Positive contact
2. Negative contact

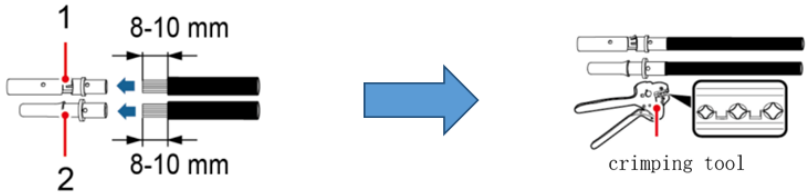

Insert the crimped positive and negative cables into the corresponding photovoltaic connectors.

3. Positive connector
4. Negative connector

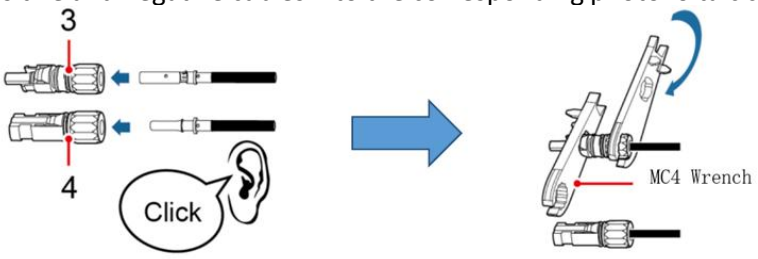

Make sure that all the DC string parameters are acceptable to the inverter according to the technical specifications given in the datasheet and in the Azzurro ZCS configurator.

In addition, check that the polarities of the photovoltaic cables are correct. Insert the positive and negative connectors in the HYD-ES inverter until you hear a “click.”

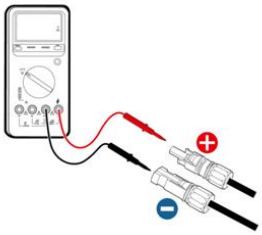

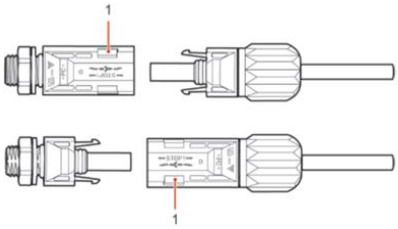

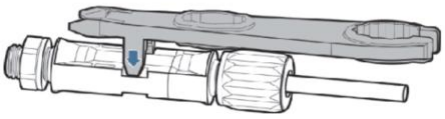

Use a MC4 wrench to disconnect the photovoltaic connectors

	CAUTION!
	Before removing the PV positive and negative connectors, make sure that the DC circuit breaker is open.

9. 1. 1 PYLONTECH BATTERY CONNECTION – 1 BATTERY TOWER

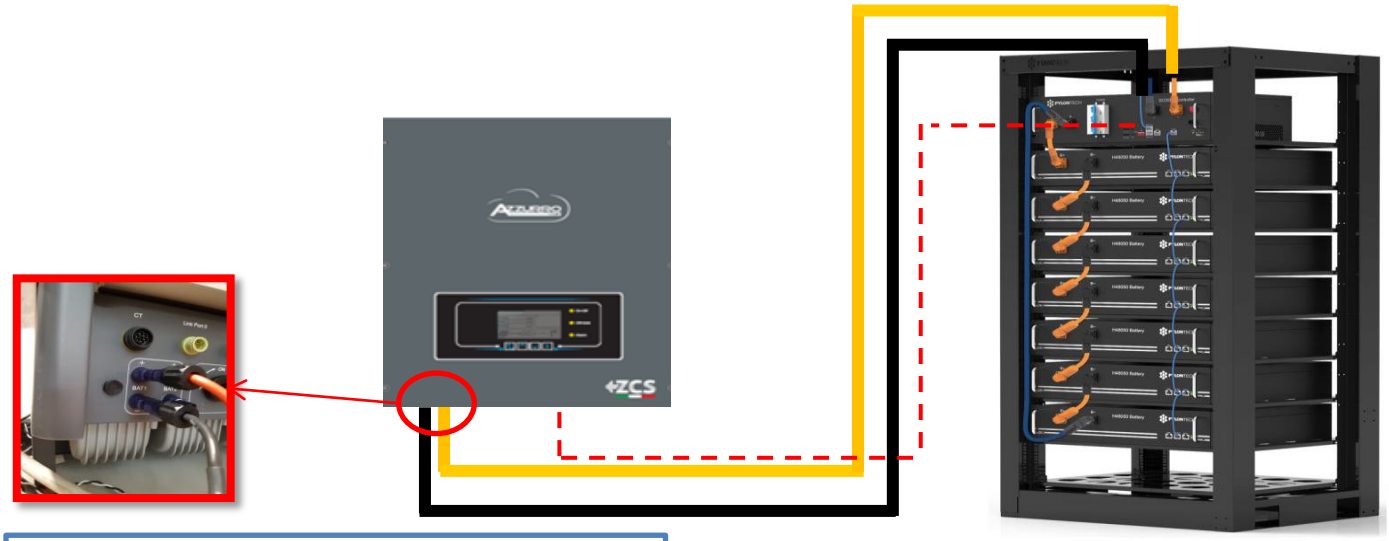

Power connections of the tower

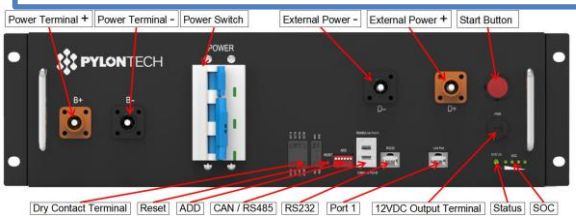

BMS

Battery module

<u>The BMS is connected to the series of modules:</u>

•Negative input of the BMS connected to the negative input of the last module in the series

•Positive input of the BMS connected to the positive input of the first battery module

<u>The modules are connected IN SERIES to each other:</u>

•Negative input of the first battery module connected to the positive input of the second,

•Negative input of the second connected to the positive of the third module

•…..

•Negative input of the second-last connected to the positive of the last module

<u>Connect the rack to the ground system and screw each module to the rack</u>

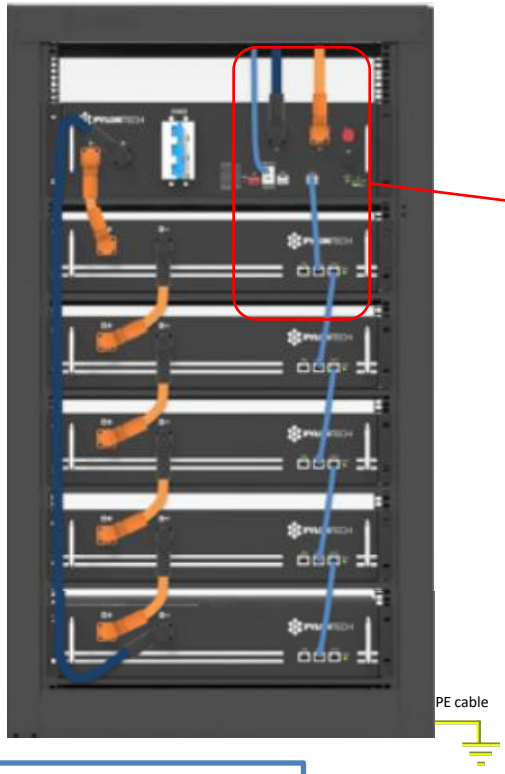

The communication connections must be arranged as follows:

•Link port of the BMS connected to link port 0 of the first battery

•Link port 1 of the first battery connected to link port 0 of the second

•…

•Link port 1 of the second-last battery connected to the last.

BMS - Inverter communication connections

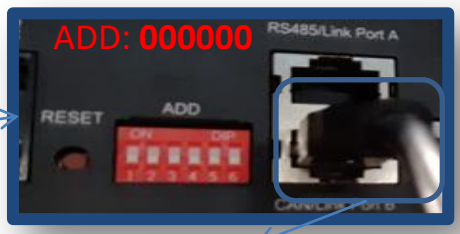

Battery communication:

•Communication ADDRESS: **000000**

•Battery-Inverter communication cable connection Link port B input

BMS - Inverter Power Connections

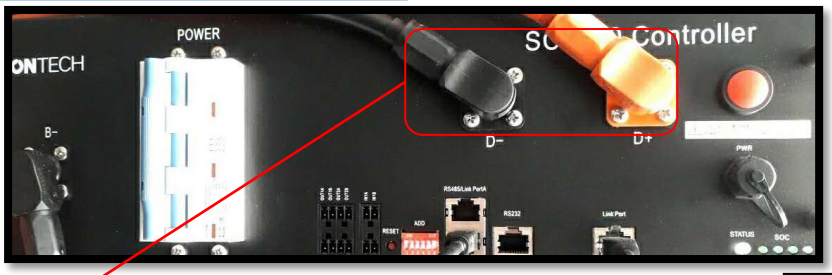

Cable ends with fast connectors to be connected to BMS

Cable ends with MC4 connectors to be connected to BAT1 input of the inverter

Power cables supplied

9. 1. 2 PYLONTECH BATTERY CONNECTION – DOUBLE BATTERY TOWER

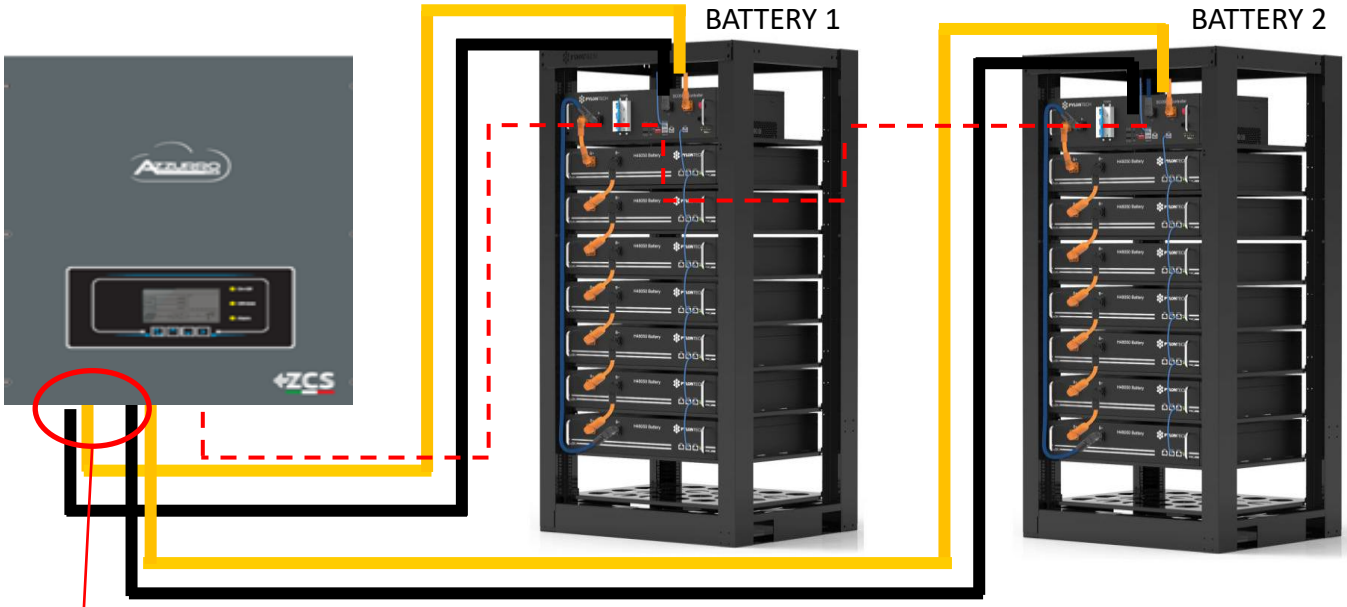

Note: Refer to the previous chapter for the connections of each tower

BATTERY 1

BATTERY 2

Inverter

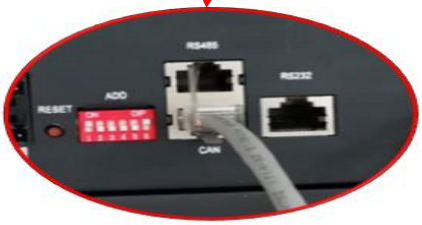

Battery 1

- Communication address: **000000**
- Connection of communication cable to Link port A input (cable coming from battery with address 1)
- Connection of battery/inverter communication cable to Link port B input

Battery 2

- Communication address: **100001**
- Connection of communication cable to Link port B input (cable coming from battery with address 0)

BMS - Inverter Power Connections

BATTERY 1

BATTERY 2

Connect each BMS to the two inputs of the inverter using the power cables (+ and -), in particular make sure to connect:
BMS of Battery 1 → BAT1
BMS of Battery 2 → BAT2

+	-	+	-
BAT1 INPUT		BAT2 INPUT	

INVERTER

9. 1. 3 PYLONTECH BATTERY CONNECTION – COM PORT CONNECTION

The end labelled **inverter** must be cut leaving only the wires connected to pins 2 (orange wire), 4 (blue wire) and 5 (white-blue wire).

Connect the cable connected to position 4 (blue wire) with position 7 of the quick communication connector.
Connect the cable connected to position 5 (white-blue wire) with position 8 of the same connector.
Connect the cable connected to position 2 (orange wire) with position 9 of the same connector.

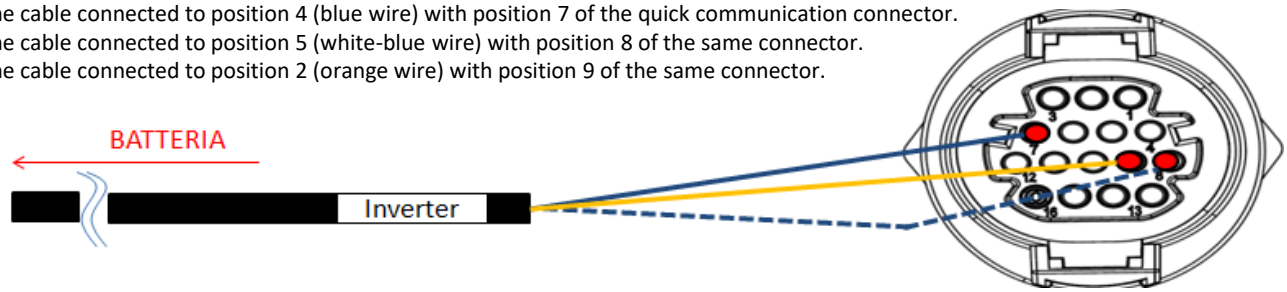

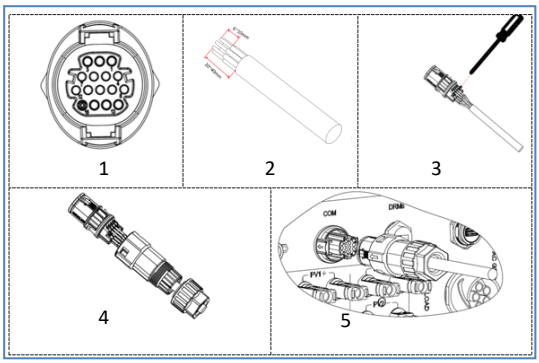

PIN Inverter	Battery communication	Notes
7	CAN H (blue wire)	Communication with the BMS of the lithium battery, the CAN of the inverter adapts to the BMS of the lithium battery.
8	CAN L (white-blue wire)	
9	GND.S (orange wire)	

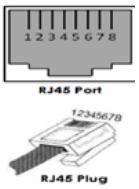

9. 2. 1 WECO BATTERY CONNECTION – 1 BATTERY TOWER

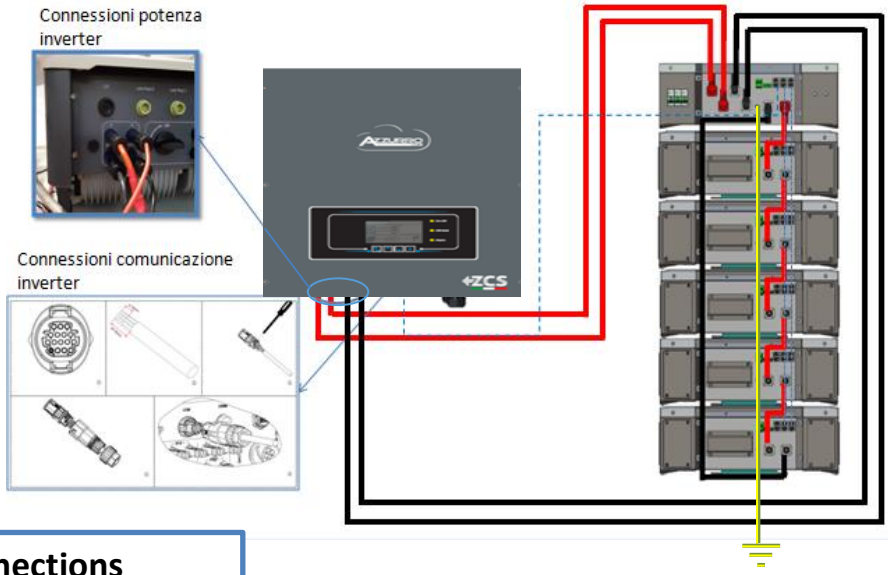

Power connections

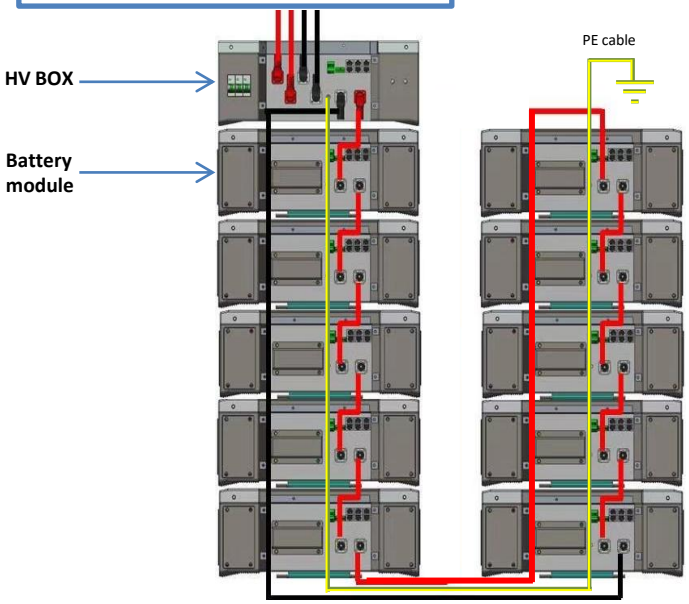

The modules are connected IN SERIES to each other:
•Negative input of the first battery module connected to the positive input of the second,
•Negative input of the second battery connected to the positive of the third module
•.....
•Negative input of the second-last battery connected to the positive of the last module

The HV BOX is connected to the series of modules:
•Negative input of the HV BOX connected to the negative of the last module in the series
•Positive input of the HV BOX connected to the positive of the first battery module

Connect ground cable between the batteries and the ground system

HVBOX and modules communication connections

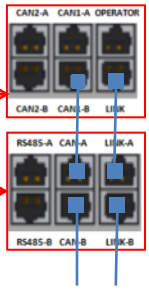

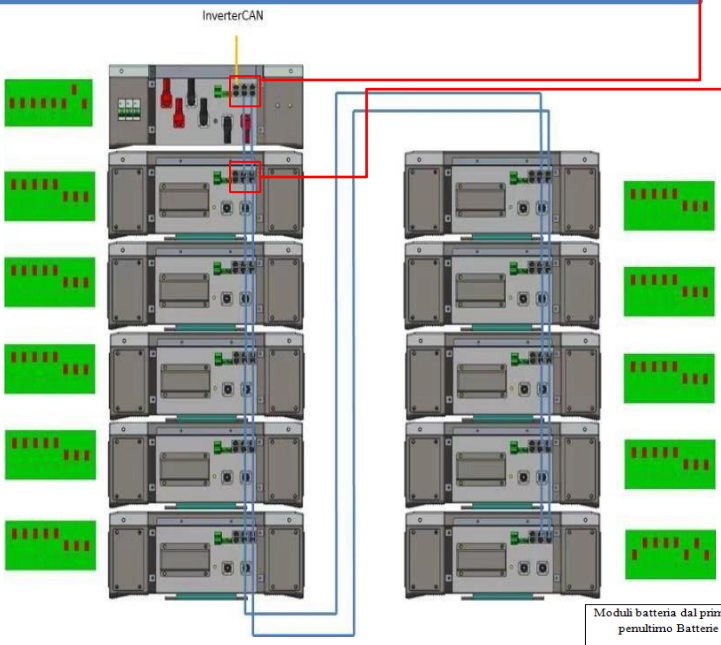

The communication connections must be arranged as follows, using the communication cables between battery modules:
CAN1-B of the HV BOX to **CAN-A** of the first battery
LINK of the HV BOX to **LINK-A** of the first battery
CAN1-B of the first battery to **CAN-A** of the second battery
LINK-B of the first battery to **LINK-A** of the second battery
…
CAN1-B of the second-last battery to **CAN-A** of the last battery
LINK-B of the second-last battery to **LINK-A** of the last battery.

The Dip switches of the battery modules must be set:

Moduli batteria dal primo al penultimo Batterie	
Ultima Batteria della serie	

HVBOX - Inverter communication connections

Battery communication:
•Communication **ADDRESS: 0000010**
•Battery-inverter communication cable connection **CAN2-A** input

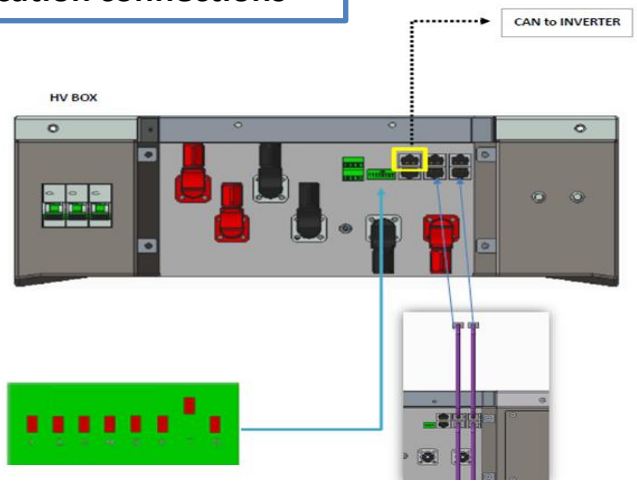

HVBOX - Inverter Power Connections

Cable ends with MC4 connectors to be connected to BAT1 and BAT1 input of the inverter

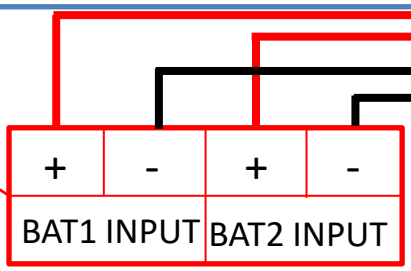

Power cables supplied

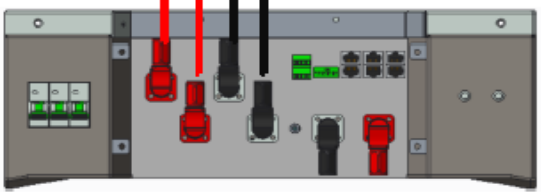

HV BOX

9. 2. 2 WECO BATTERY CONNECTION – DOUBLE BATTERY TOWER

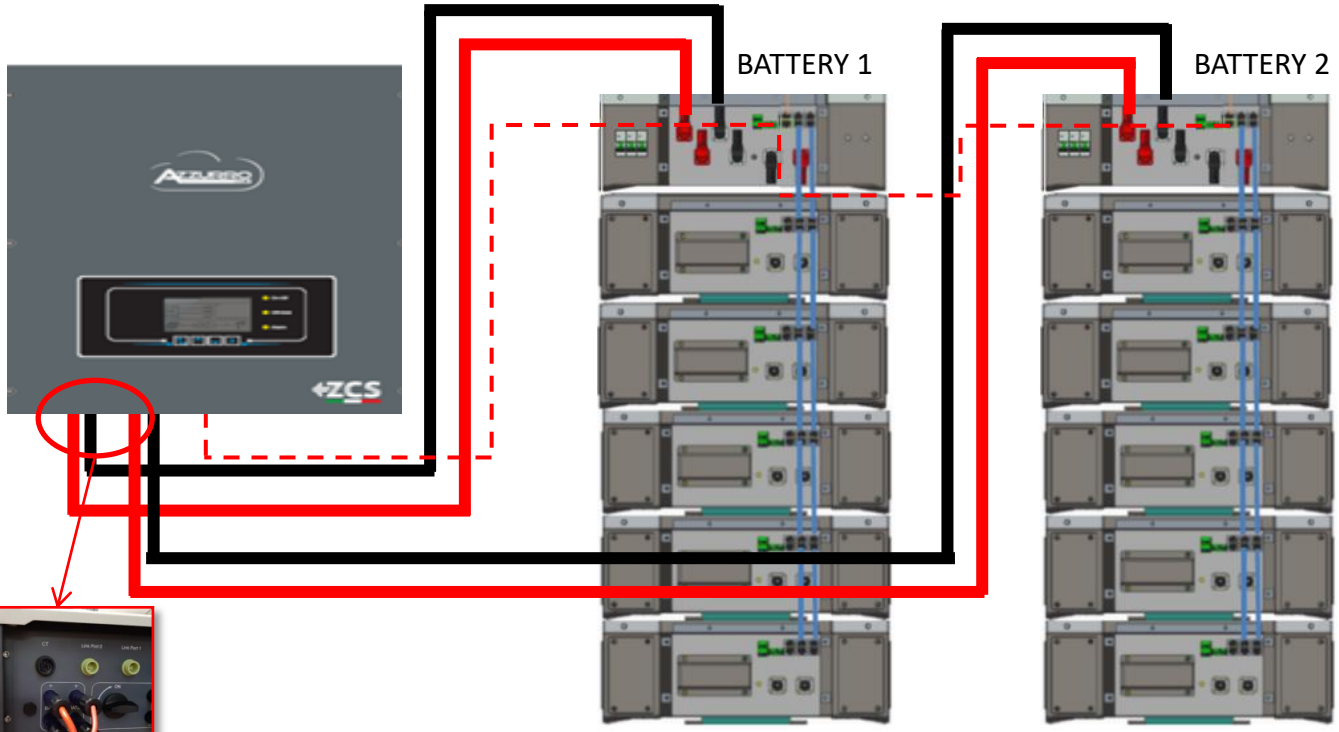

Note: Refer to the previous chapter for the connections of each tower

In the case of two battery towers, the **dip switches** of the HV BOXES should be set as follows:
•Battery Tower 1
Set address to **ADD=00000000**
•Battery Tower 2
Set address to **ADD=10000010**

Communication between the two HV boxes:

A cable from the **CAN2-A** input of the HV BOX of tower 2 must be connected to the **CAN2-A** input of the HV BOX of tower 1; finally, the Inverter/HV BOX communication cable must be inserted in the **CAN2-B** port of the same HV BOX, and must be connected to the **COM** of the inverter.

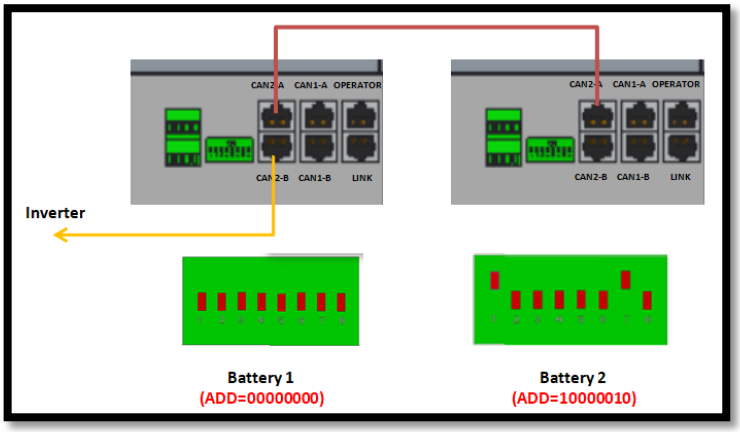

HVBOX - Inverter Power Connections

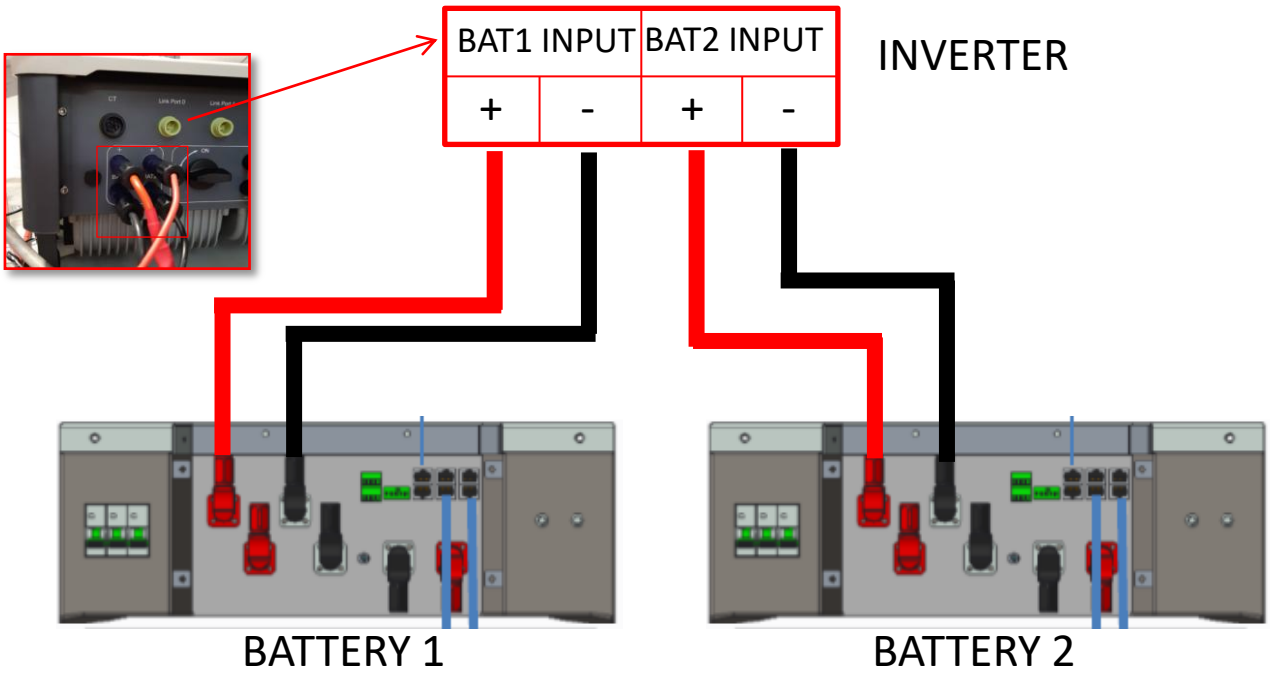

9. 2. 3 WECO BATTERY CONNECTION – COM PORT CONNECTION

Connect the white-orange cable to position 7 of the quick communication connector.
Connect the orange cable to position 8 of the quick communication connector.

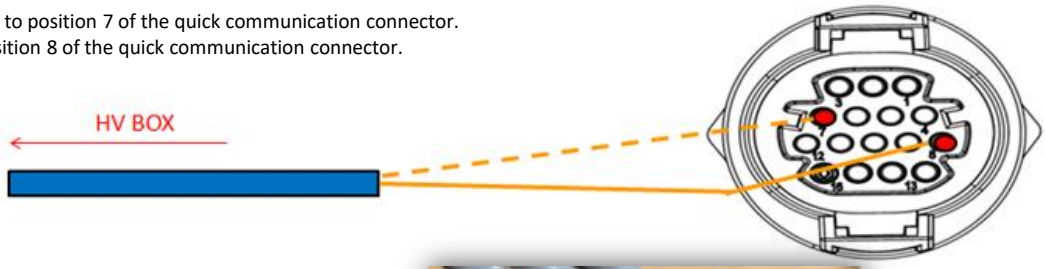

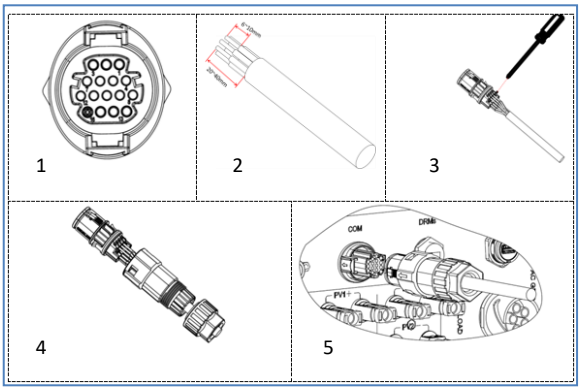

PIN Inverter	Battery communication	Notes
7	CAN H (white-orange wire)	Communication with the HV BOX of the lithium battery, the CAN of the inverter adapts to the HV BOX of the lithium battery.
8	CAN L (orange wire)	

10. DIRECT READING VIA CURRENT SENSORS

Single-line diagram of hybrid inverter with CTs read mode on exchange

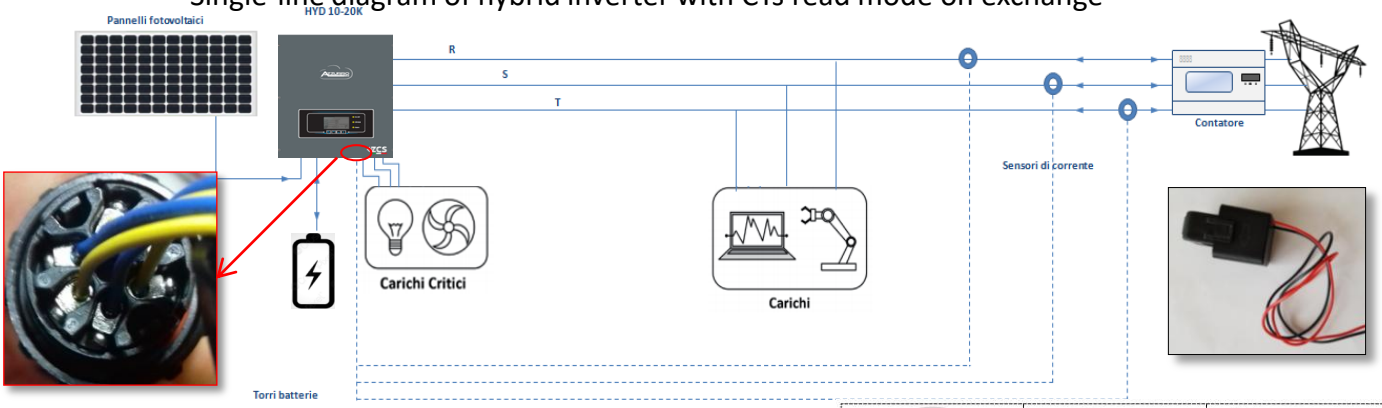

To connect each of the 3 CTs to the inverter, wire the quick connector as shown in the table below:

PIN	Definition	Function	Notes
1	Ict_R-	Negative R-phase sensor (L1)	Used to connect the R-phase current sensor (L1)
2	Ict_R+	Positive R-phase sensor (L1)	
3	Ict_S-	Negative S-phase sensor (L2)	Used to connect the S-phase current sensor (L2)
4	Ict_S+	Positive S-phase sensor (L2)	
5	Ict_T-	Negative T-phase sensor (L3)	Used to connect the T-phase current sensor (L3)
6	Ict_T+	Positive T-phase sensor (L3)	

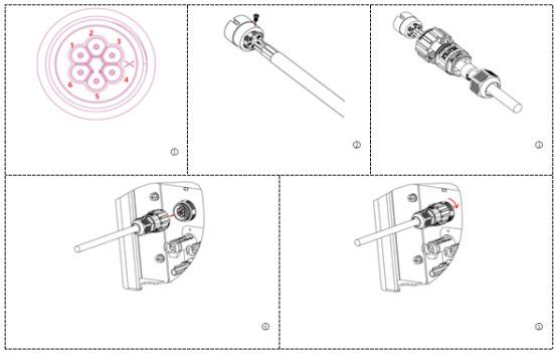

This method can be used for CT - Hybrid distances of less than 50 m

To allow the system to correctly read the current flows of the system, use the "CT Calibration" function in the advanced settings of the device. For the inverter to perform this operation, it is necessary that:

- The system is connected to the grid
- The batteries are present and switched on
- The loads in the system are off
- Photovoltaic production is off

2. Advanced settings	Psw 0001
	9. CT Calibration

In this way, the system will automatically set the position of each sensor in the correct phase and the direction in line with the system's current flows.

11.1 METER READING

Single-line diagram of hybrid inverter with meter reading mode on exchange only

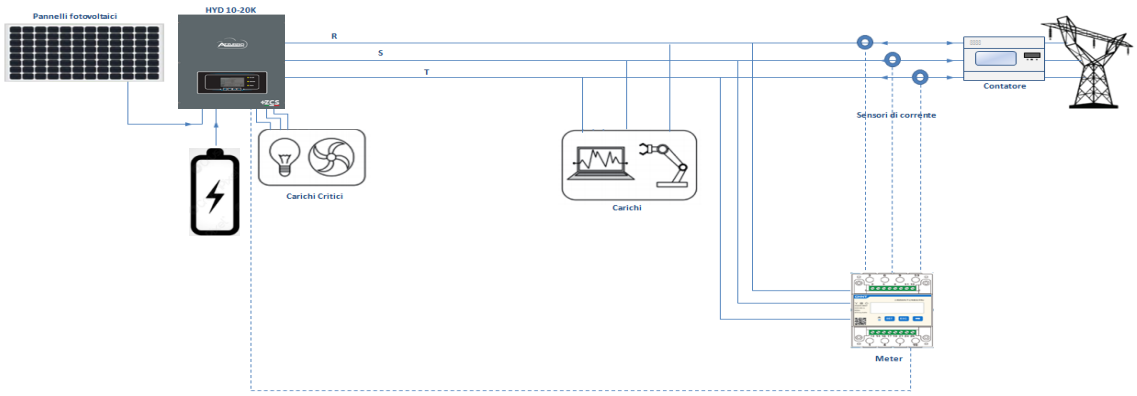

Single-line diagram of hybrid inverter with meter reading mode on exchange and external production

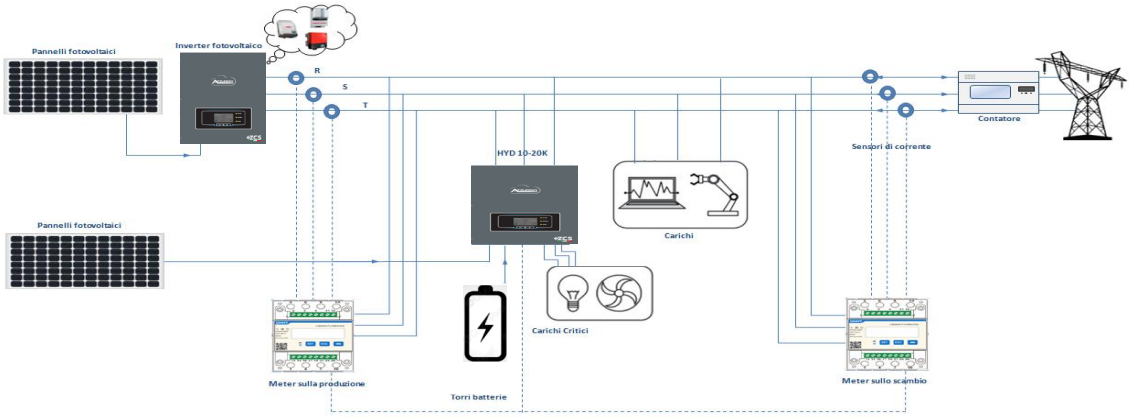

Meter connections

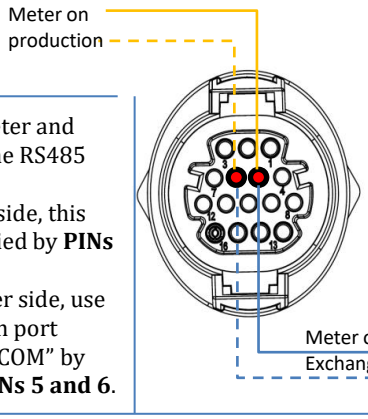

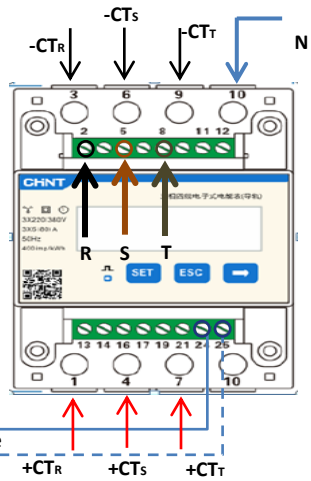

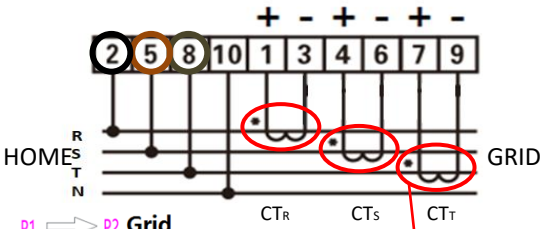

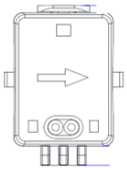

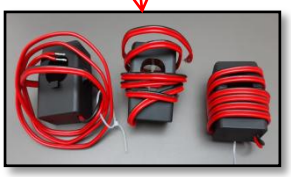

1. Connect Meter and inverter via the RS485 serial port.
On the Meter side, this port is identified by **PINs 24 and 25.**
On the inverter side, use the connection port identified as "COM" by connecting **PINs 5 and 6**.

2. Connect PIN 10 of the Meter to the neutral cable (N), connect PINs 2, 5 and 8 to phases R, S and T respectively.
CT connections, the terminals of the sensor positioned on **phase R** must be connected to **PIN 1** (red wire) and **PIN 3** (black wire).
The terminals of the sensor positioned on **phase S** must be connected to **PIN 4** (red wire) and **PIN 6** (black wire).
The terminals of the sensor positioned on **phase T** must be connected to **PIN 7** (red wire) and **PIN 9** (black wire).
Position the sensors, paying attention to the direction on the sensor itself (arrow pointing towards the grid).
ATTENTION: hook the CT sensors to the phases only after connecting them to the Meter.

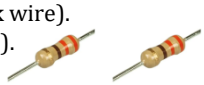

NOTES: For **distances** between the meter and hybrid inverter of **more than 100 metre**s, it is recommended to connect two 120 OhM resistors along the 485 daisy chain: the first to the inverter (between PIN 5 and PIN 6 of the inverter COM), the second directly to the meter (PIN 24 and PIN 25).

11.2 METER SETTING

To configure the device in read mode on the exchange, enter the settings menu as shown below:
•Press **SET** and the word **CODE** will appear

•Enter the number "701":
1. From the first screen where the number "600" will appear, press the "→" key once to write the number "601".
2. Press "**SET**" twice to move the cursor left, highlighting "601";
3. Press the "→" key once more to write the number "701"

Note: In case of error, press "ESC" and then "SET" again to reset the required code.

•Confirm by pressing **SET** and to enter the settings menu.
•Enter the following menus and set the parameters indicated:

1. **CT**:
   a. Press **SET** to enter the menu
   b. Write "40":
   a. From the first screen where the number "1" appears, press the "→" key repeatedly until the number "10" is written.
   b. Press **SET** once to move the cursor left, highlighting "10"
   c. Press the "→" key repeatedly until the number "40" is written.
   d. Press "ESC" to confirm and "→" to scroll to the next setting.

Note: In case of CT sensors other than those supplied, enter the correct transformation ratio.

Note: In case of error, press "SET" until the thousand digit is highlighted and then press "→" until only the number "1" is displayed; at this point, repeat the above procedure.

2. **ADDRESS**:
   a. Press **SET** to enter the menu:
   b. Leave "01" for Meter on exchange
   c. Write "02" (by pressing "→" once from screen "01"). With address 02, the inverter assigns the data sent by the meter as production power. A maximum of 3 meters can be set for the production (Addresses 02, 03 and 04)

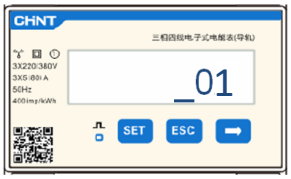

Meter on Exchange

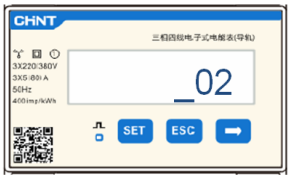

Meter on Production

   d. Press "ESC" to confirm.

11. 3 CHECKING THE CORRECT READING OF THE METER

In order to verify the correct reading of the **meter on exchange**, make sure that the hybrid inverter and any other PV production sources are switched off.
Switch on loads greater than 1 kW for each of the three phases of the system.
Stand in front of the meter and use the "→" keys to scroll through the items, and "ESC" to go back, checking that:

1. The Power Factor values for each phase Fa, Fb and Fc (phase shift between voltage and current) are between 0.8-1.0. If the value is lower, move the sensor to one of the other two phases until the value is between 0.8-1.0.

2. The Pa, Pb and Pc Powers are:
   - •Greater than 1 kW.
   - •In line with the home consumption.
   - •The sign in front of each negative value (–).

   In the case of a positive sign, reverse the direction of the toroidal winding in question.

In the case of a **meter for reading the production of existing photovoltaic systems**, repeat the previous steps :

1. Check the Power Factor as described in the previous case.
2. This time the sign of the powers must be positive for Pa, Pb, and Pc
3. Switch on the Hybrid Inverter, check that the total PV power value (Pt) is in line with the value shown on the inverter's display.

12. GRID CONNECTION

	Load	L1	Cavo di rame multicore da esterno	Conduttore con sezione trasversale: **6mm²~10mm²**
		L2		
		L3		
		N		
		PE		
	AC	L1	Cavo di rame multicore da esterno	Conduttore con sezione trasversale: **10mm²~16mm²**
		L2		
		L3		
		N		
		PE		

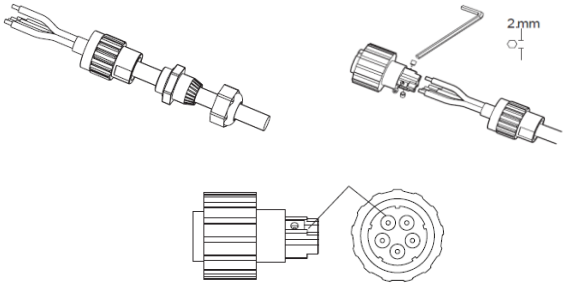

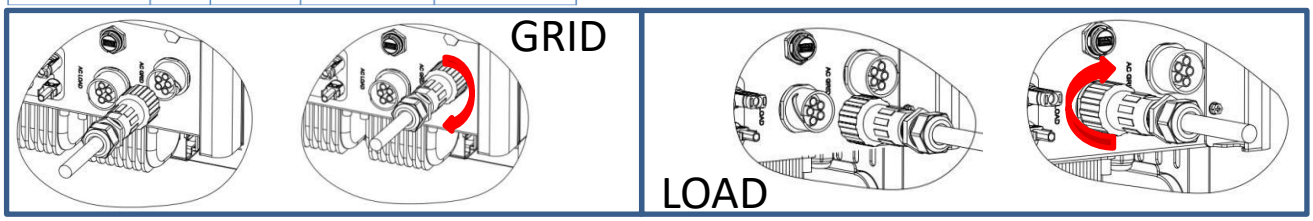

13. INITIAL START-UP

IMPORTANT: Use a PC and USB in the event of update requests and country code settings different from the default setting.

1. Set the DC switch of the inverter to ON

2. Wait for the display to turn on
(you will see a normal indication of a no grid fault)

3. Turn on the **Pylontech** battery
   a) Switch on the BMS (shown in figure below):
   b) Turn on the Power Switch (DC disconnect switch)
   c) Press the red START button for one second

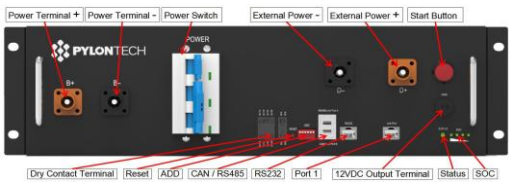

Turn on the **WeCo** battery
To start the HV BOX module, simply arm the GENERAL BREAKER present on the front of the HV BOX.

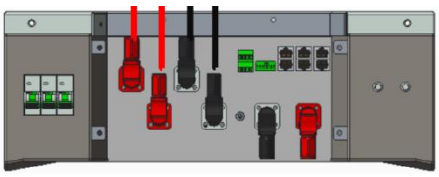

4. Supply AC voltage to the inverter via the dedicated switch

14. FIRST CONFIGURATION

Parameters	Notes
1. OSD language options	Default English
2. Setting of date and time, confirmation	Use display keys
3. Importing safety parameters (country code)*	Select the correct country in accordance with the requirements of the local energy authorities.
4. Setting the input channel**	Default order: BAT1, BAT2, PV1, PV2
5. Setting the battery parameters***	The default values are shown according to the input channel configured
6. The set-up is completed	

*3. Importing safety parameters (country code)

1.Basic settings

2. Safety parameters

1. 001-002-CEI-021 External

Code		Region		Code		Region	
00	00	Germany	VDE4105	18	00	EU	EN50438
	01		BDEW		01		EN50549
	02		VDE0126	19	00	IEC EN61727	
01	00	Italia	CEI-021 Internal	20	00	Korea	
	01		CEI-016 Italia	21	00	Sweden	
	02		CEI-021 External	22	00	Europe General	
	03		CEI-021 In Areti	24	00	Cyprus	
02	00	Australia		25	00	India	
	01		AU-WA	26	00	Philippines	
	02		AU-SA	27	00	New Zealand	
	03		AU-VIC	28	00	Brazil	
	04		AU-QLD		01		LV
	05		AU-VAR		02		230
	06		AUSGRID		03		254
	07		Horizon	29	00	Slovakia	VSD
03	00	Spain	RD1699		01		SSE
04	00	Turkey			02		ZSD
05	00	Denmark		33		Ukraine	
	01		TR322	35	00	Mexico	LV
06	00	Greece	Continent	38		Wide-Range-60Hz	
	01		island	39		Ireland EN50438	
07	00	Netherland		40	00	Thailand	PEA
08	00	Belgium			01		MEA
09	00	UK	G99	42	00	LV-Range-50Hz	
	01		G98	44	00	South Africa	
10	00	China		46	00	Dubai	DEWG
	01		Taiwan		01		DEWG MV
11	00	France		107	00	Croatia	
	01		FAR Arrete23	108	00	Lithuania	

NOTE: By default, the external interface of the inverters are set to the CEI-021 country code, if a different country code is required, please contact technical support.

** 4. Setting the input channels

Input Channel Config	
Input Channel1	Bat input 1
	Bat input 2
	Not used
Input Channel2	Bat input 1
	Bat input 2
	Not used
Input Channel3	PV input 1
	PV input 2
	Not used
Input Channel4	PV input 1
	PV input 2
	Not used

OK ↓ Up↑ Down ↓

A. In the case of a **single Pylontech battery tower**, set the inputs according to the channel populated:
- Input channel 1 → BAT input 1 (if the channel populated is no. 1)
- Input channel 2 → Not Used

B. In the case of a **single WeCo battery tower**, set the inputs by populating both channels:
- Input channel 1 → BAT input 1
- Input channel 2 → BAT input 1

C. In case of **double battery tower (Pylontech, WeCo)** set the inputs:
- Input channel 1 → BAT input 1
- Input channel 2 → BAT input 2

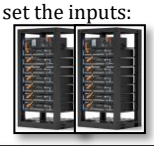

OK ↓ Up↑ Down ↓

- For independent strings, set:
  - Input channel 3 → PV input 1
  - Input channel 4 → PV input 2
- For parallel strings, set:
  - Input channel 3 → PV input 1
  - Input channel 4 → PV input 1

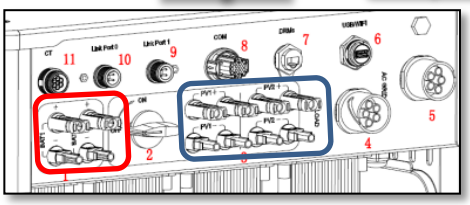

***5. Setting the battery parameters

A. Single Pylontech battery tower

BATTERY 1	
1.Battery Type	Pylon
2.Battery Address	00
3.Maximum Charge (A)	25.00A
3.Maximum Discharge (A)	25.00A
5.Depth of Discharge	90%
6.Salvare	

B. Single WECO battery tower

BATTERY 1	
1.Battery Type	WECO
2.Battery Address	00
3.Maximum Charge (A)	50.00A
3.Maximum Discharge (A)	50.00A
5.Depth of Discharge	90%
6.Save	

C. Double Pylontech/WECO battery tower

BATTERY 1	
1.Battery Type	Pylon/ WECO
2.Battery Address	00
3.Maximum Charge (A)	25.00A
3.Maximum Discharge (A)	25.00A
5.Depth of Discharge	90%
6.Save	

BATTERY 2	
1.Battery Type	Pylon/ WECO
2.Battery Address	01
3.Maximum Charge (A)	25.00A
3.Maximum Discharge (A)	25.00A
5.Depth of Discharge	90%
6.Save	

15. CHECKING THE INVERTER SETTINGS

To check whether the parameters set are correct, enter the display menu under “Inverter Info” and check the data, especially those highlighted:

Inverter Info (1)		
Serial number :	ZP1ES015L68007	➢*Serial number of the machine*
SW version:	V2.00	➢*Software version installed*
DSP1 SW version:	V030010	➢*Serial number of the machine*
DSP2 SW version:	V030010	➢*Software version installed*

Inverter Info (1)		
Working mode:	Automatic mode	➢*Information on operating mode (must be automatic)*
RS485 Modbus Address	01	➢*Communication address*
EPS Mode:	Disabled	➢*Information on EPS mode*
IV Curve Scan	Disabled	➢*Information on MPPT scan mode*

Inverter Info (2)		
HW version:	V001	➢*Hardware version*
Power level:	10 kW	➢*Max inverter power*
Country:	0: Italy CEI-021 Int	➢*Country code for legislation*
Service Code:	V030013	➢*Service Code Version*

Inverter Info (4)		
Logic interface:	Disabled	➢*Information on DRMs0 mode (enable only for Australia)*
Set PF time: DFLT: 0.000s	SET : 0.000s	➢*Response delay in frequency*
Set QV time: DFLT: 3.0s	SET : 3.0s	➢*Response delay in voltage*
Power Factor :	100%	➢*Power factor value*

Inverter Info (3)		
Channel 1:	Bat input 1	➢*Setting Battery 1 Channel*
Channel 2:	Bat input 1	➢*Setting Battery 2 Channel*
Channel 3:	PV Input 1	➢*Setting PV 1 Channel*
Channel 4:	PV Input 1	➢*Setting PV 2 Channel*

Inverter Info (1)		
0 grid feed-in mode:	Disabled	➢*Information on maximum grid in-feed mode*
Insulation resistance	404KOhm	➢*Measured value of the insulation resistance*

16. CHECKING THE BATTERY SETTINGS

To check whether the parameters set are correct, enter the display menu under “Battery Info” and check the data, especially those highlighted

Single tower

Double tower

Battery Info (1)		
Battery type:	Pylon	
Bat Address:	00	
Battery capacity:	50Ah	
Depth of Discharge :	90% (EPS) 90%	

Battery Info (1)		
Battery type:	Pylon	
Bat Address:	00	
Battery capacity:	50Ah	
Depth of Discharge :	90% (EPS) 90%	

Battery Info (2)		
Battery type:	Pylon	➢*Battery model set*
Bat Address:	01	➢*Battery address*
Battery capacity:	50Ah	➢*Battery capacity in Ah*
Depth of Discharge :	90% (EPS) 90%	➢*Battery discharge percentage*

Battery Info (2)	
Max charge curr. (A) :	BMS: 25.00A SET : 25.00A
Max charge (V) :	216V
Max discharge curr. (A):	BMS: 25.00A SET : 25.00A
Min. discharge voltage (V):	183V

Battery Info (2)	
Max charge curr. (A) :	BMS: 25.00A SET : 25.00A
Max charge (V) :	216V
Max discharge curr. (A):	BMS: 25.00A SET : 25.00A
Min. discharge voltage (V):	183V

Battery Info (2)		
Max charge curr. (A) :	BMS: 25.00A SET : 25.00A	➢*Maximum charge current in A*
Max charge (V) :	216V	➢*Max voltage value depends on no. of batteries*
Max discharge curr. (A):	BMS: 25.00A SET : 25.00A	➢*Maximum discharge current in A*
Min. discharge voltage (V):	183V	➢*Min voltage value depends on no. of batteries*

Battery Info (3)	
EPS Safety Buffer:	20%

Battery Info (3)	
EPS Safety Buffer:	20%

Battery Info (3)		
EPS Safety Buffer:	20%	➢*EPS safety value*

Single tower

Double tower

Battery Info (1)			
Battery type:	WECO	WECO	WECO
Bat Address:	00	00	01
Battery capacity:	105Ah	105Ah	105Ah
Depth of Discharge :	90% (EPS) 90%	90% (EPS) 90%	90% (EPS) 90%

Battery Info (2)			
Max charge curr. (A) :	BMS 50.00A SET : 50.00A	BMS: 25.00A SET : 25.00A	BMS: 25.00A SET : 25.00A
Max charge (V) :	216V	216V	216V
Max discharge curr. (A):	BMS: 25.00A SET : 25.00A	BMS: 25.00A SET : 25.00A	BMS: 25.00A SET : 25.00A
Min discharge voltage (V):	183V	183V	183V

Battery Info (3)			
EPS Safety Buffer:	20%	20%	20%

- *Battery model set*
- *Battery address*
- *Battery capacity in Ah*
- *Battery discharge percentage*
- *Maximum charge current in A*
- *Max voltage value depends on no. of batteries*
- *Maximum discharge current in A*
- *Min voltage value depends on no. of batteries*
- *EPS safety value*

17.1 EPS MODE (OFF GRID)

In the event of a power failure, or start-up in OFF-Grid mode, if the EPS function is active, the inverter is able to supply energy - coming from the PV and stored in the batteries - to critical loads connected to the LOAD connection port.

17.2 EPS MODE (OFF GRID) - WIRING PROCEDURE AND INSTALLATION TYPES

Identify critical or priority domestic loads: it is advisable to identify the domestic loads strictly necessary during power outages, such as lights, refrigerators or freezers, emergency sockets.

- High power loads may not be supported by the inverter in EPS mode, given the maximum power that can be delivered under these conditions.
- Loads with high inrush currents may not be supported by the inverter in EPS mode, as the inrush current, even if only for a very short period, is significantly higher than that supplied by the inverter.

Connect the phase, neutral and ground wires to the LOAD output located on the right side of the bottom of the inverter.
NOTE: the LOAD output must only be used for connecting the critical load.
The procedure for connecting the power cables to the LOAD output is the same as that for connecting the cables to the GRID output.

CHANGE-OVER SWITCH

In case of maintenance of components of the photovoltaic system or in case of an inverter that cannot be used, it is recommended to install a change-over switch so that the loads normally connected to the inverter's load line can be fed directly from the grid.

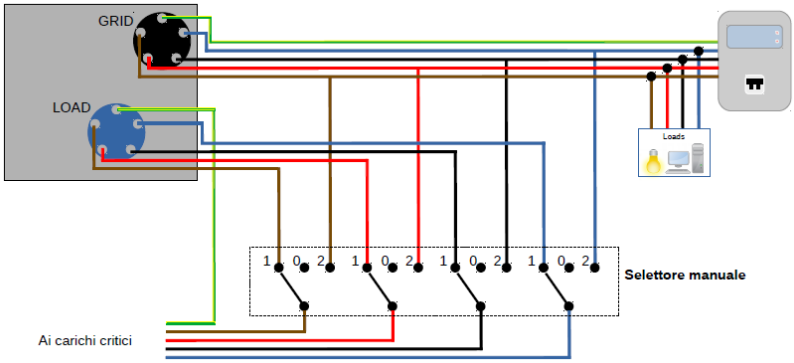

Position 1→ Priority loads connected and powered by the inverter's LOAD line

Position 0→ Priority loads not powered by either the inverter or the grid

Position 2→ Priority loads connected and powered by the grid

DOUBLE SWITCH CONTACTOR

For subsidised systems, a double switch contactor can be installed. This device will ensure that the critical loads are normally powered by the grid. They will be powered by the EPS LOAD line of the inverter only in the event of a power failure, thanks to the change-over of the contactors

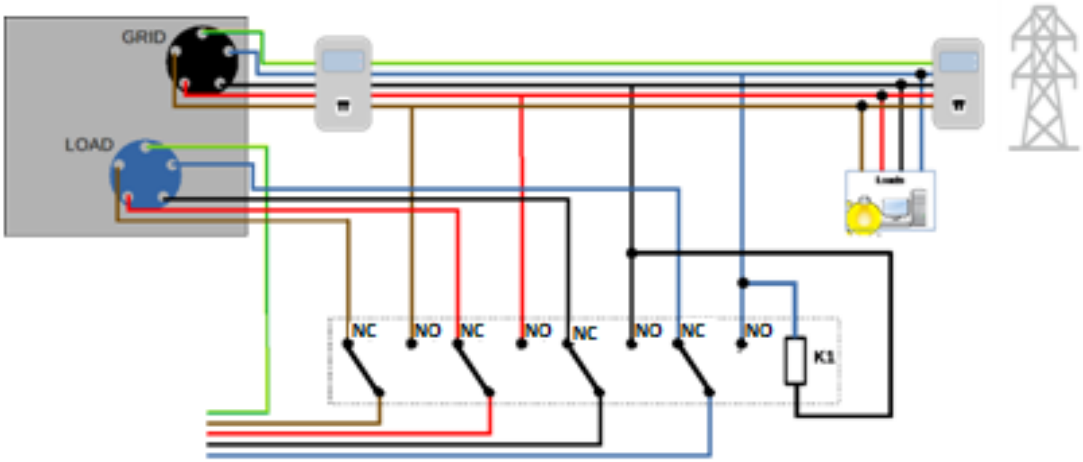

NOTE: For the conditions described above, in the event of a power failure, the part of the system powered by the inverter's LOAD port behaves like an IT system.
If the hybrid inverter is to be installed under different conditions from those shown in the diagrams above, contact technical support to check whether it is feasible.

17.3 EPS MODE (OFF GRID) - OPERATION

If the alternating voltage supplied by the mains is present (normal operating condition), both the standard loads of the system and the priority or critical loads are supplied by the mains without the need to use a double switch-over contactor. This operation is shown in the figure below.

It should also be noted that the LOAD output is always energised, even when the mains voltage is present.

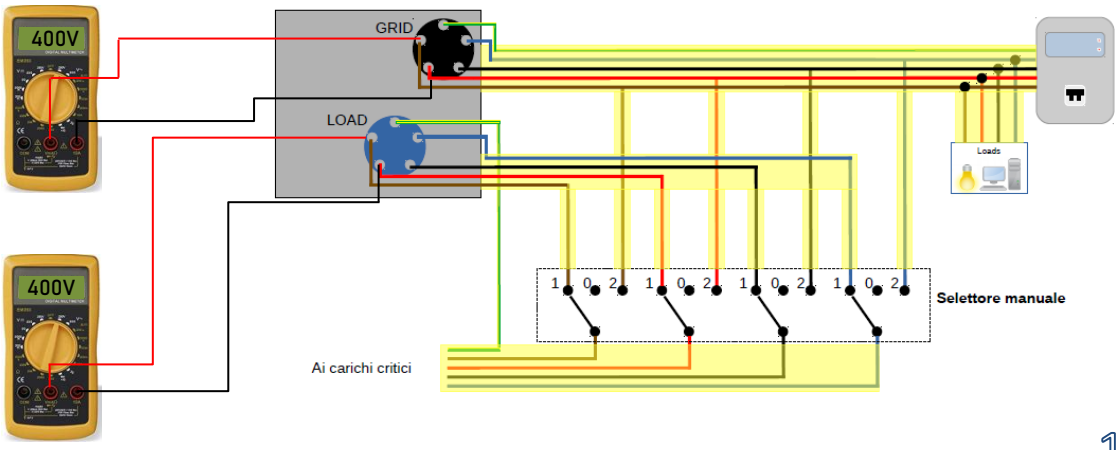

In the event of a **power blackout**, the alternating voltage supplied by the mains will be lost. This condition will cause the internal contacts of the hybrid inverter to switch over which, once the set activation time has expired, will continue to supply an alternating voltage of 400V to the LOAD output, supplying power only to the critical loads according to the availability of the batteries and PV system.

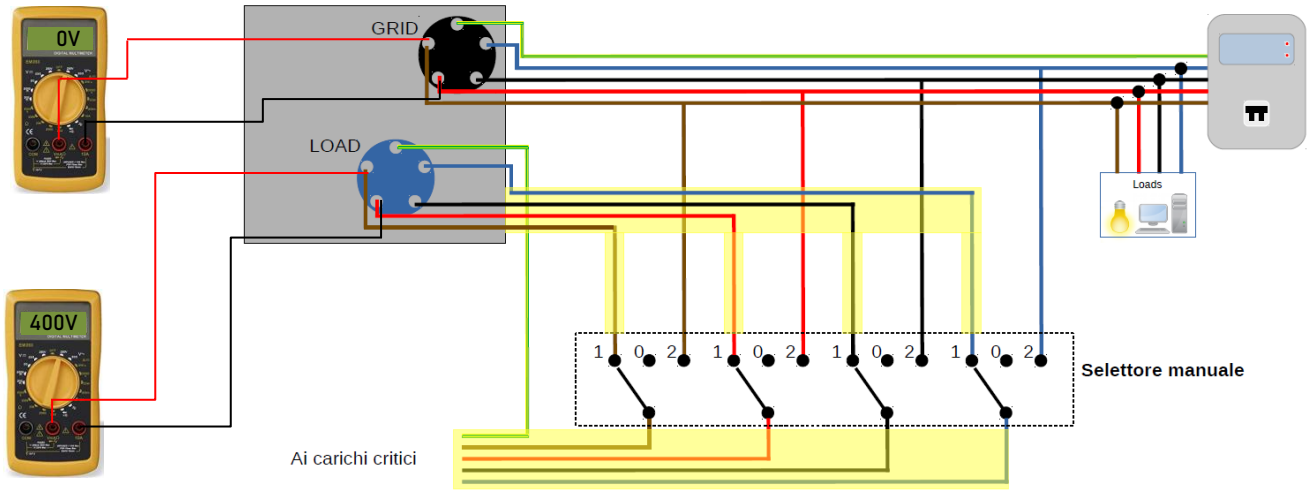

NOTE: with this configuration, the system becomes an IT system during a blackout.

17.4 EPS MODE (OFF GRID) - MENU ENABLING

To enable the EPS (OFF-GRID) mode:

1. The EPS mode must be enabled from the display.

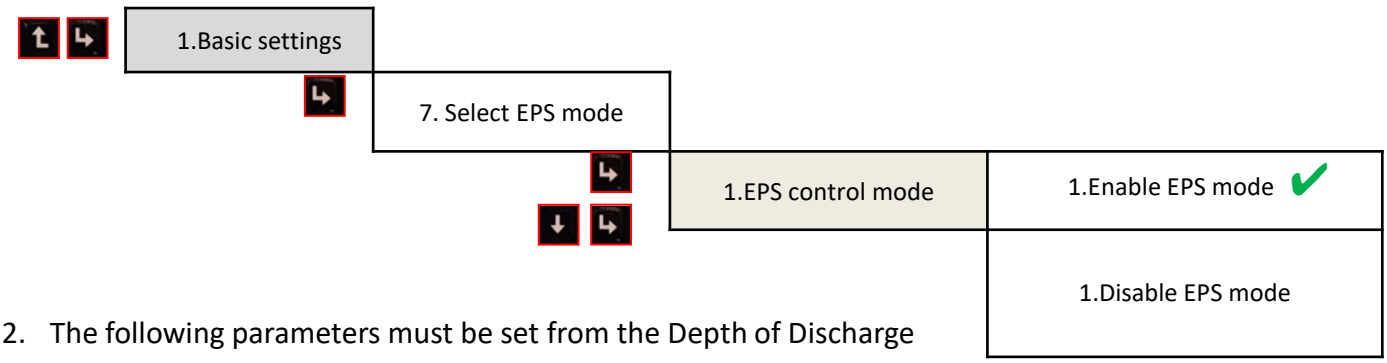

2. The following parameters must be set from the Depth of Discharge menu.

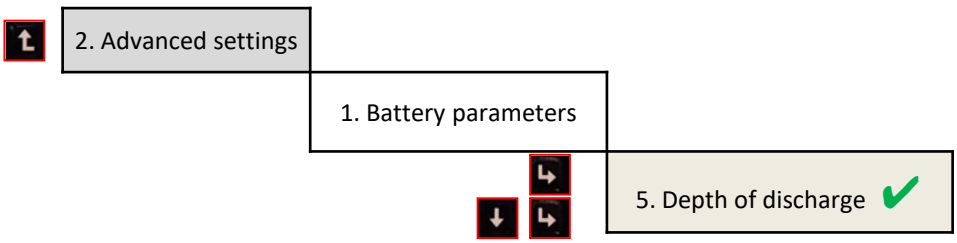

Depth of Discharge

80%

EPS Depth of Discharge

85%

EPS Safety Buffer

10%

1. Depth of Discharge in ON-Grid mode
e.g.
Max charge value 100%
Min discharge value 20%

2. Depth of Discharge in EPS (or OFF-Grid) mode, beyond which the inverter stops supplying power to the connected loads.

SOC% < (100 - Depth of Discharge in EPS mode)
e.g. Max charge value = 100%
Min discharge value = 15%

3. After reaching the minimum EPS discharge value, the inverter resumes supplying power to the loads in EPS (or OFF-Grid) mode once the set threshold has been exceeded

SOC%> 100 – Depth of Discharge in EPS+ safety buffer)

e.g. LOAD output re-supplying value = 26%

17.5 EPS OPERATING MODE (OFF GRID)

Standby

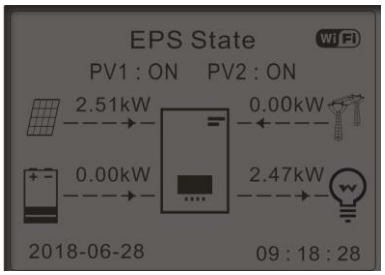

If PV production = LOAD consumption, the HYD-ES inverter will not charge or discharge the battery.

Discharge

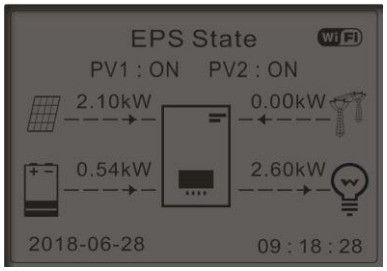

If PV production < LOAD consumption (ΔP＞100W) the HYD-ES inverter will discharge the battery.

Charge

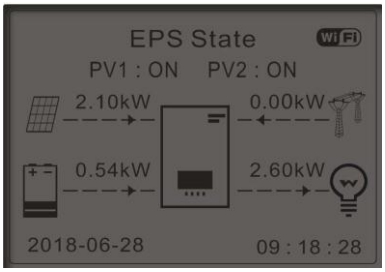

If PV production > LOAD consumption (ΔP > 100W) the HYD-ES inverter will charge the battery.

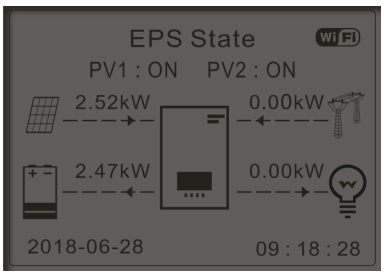

If the photovoltaic production is normal, but the LOAD consumption = 0, or if the **SOC% < 100% - EPS$_{DOD}$** the excess energy will be stored in the battery.

18.1 PARALLEL INVERTER MODE - CONFIGURATION

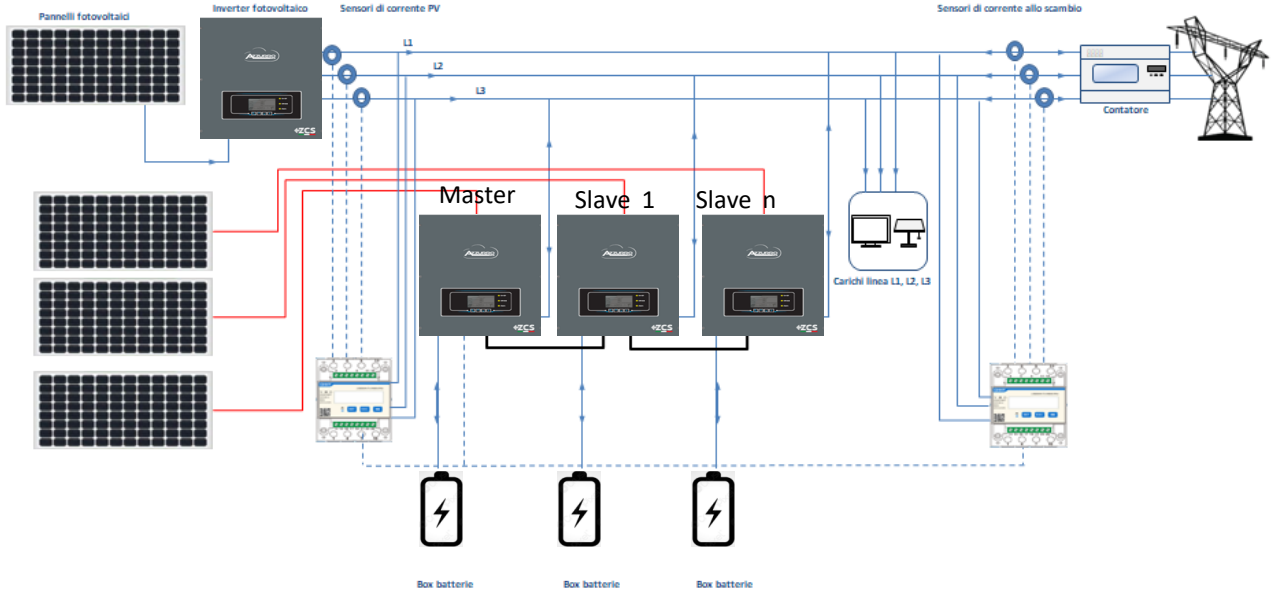

1.The inverters must be interconnected using the cable supplied, making sure to populate the inputs as follows:
- **Link port 0** of **Master** inverter → connected to **terminating resistor** (8-pin terminal)
- **Link port 1** of **Master** Inverter → **Link port 0** of **Slave 1** Inverter
- **Link port 1** of **Slave 1** Inverter → **Link port 0** of **Slave 2** Inverter
- **Link port 1** of **Slave 2** Inverter → **Link port 0** of **Slave 3** Inverter
- ...
- **Link port 1** of **Slave n-1** Inverter → **Link port 0** of **Slave n** Inverter
- **Link port 0** of **Slave n** inverter → connected to **terminating resistor** (8-pin terminal)

Note: The terminating resistors are supplied as standard

2.If the inverters connected are of the same size, the LOAD outputs can be connected in parallel in order to supply power to the same group of priority loads. To do this, a parallel switchboard must be used. It is necessary to ensure that the connections between each inverter and the parallel switchboard have:
- the same length
- the same cross-section
- the lowest possible impedance.

It is advisable to install suitable protection on each connection line between the inverter and the switchboard.

3.The total load connected to the LOAD outputs must be less than the total sum of the power outputs of the inverters in EPS mode.

4.The meters must be connected to the Master Inverter (Primary)

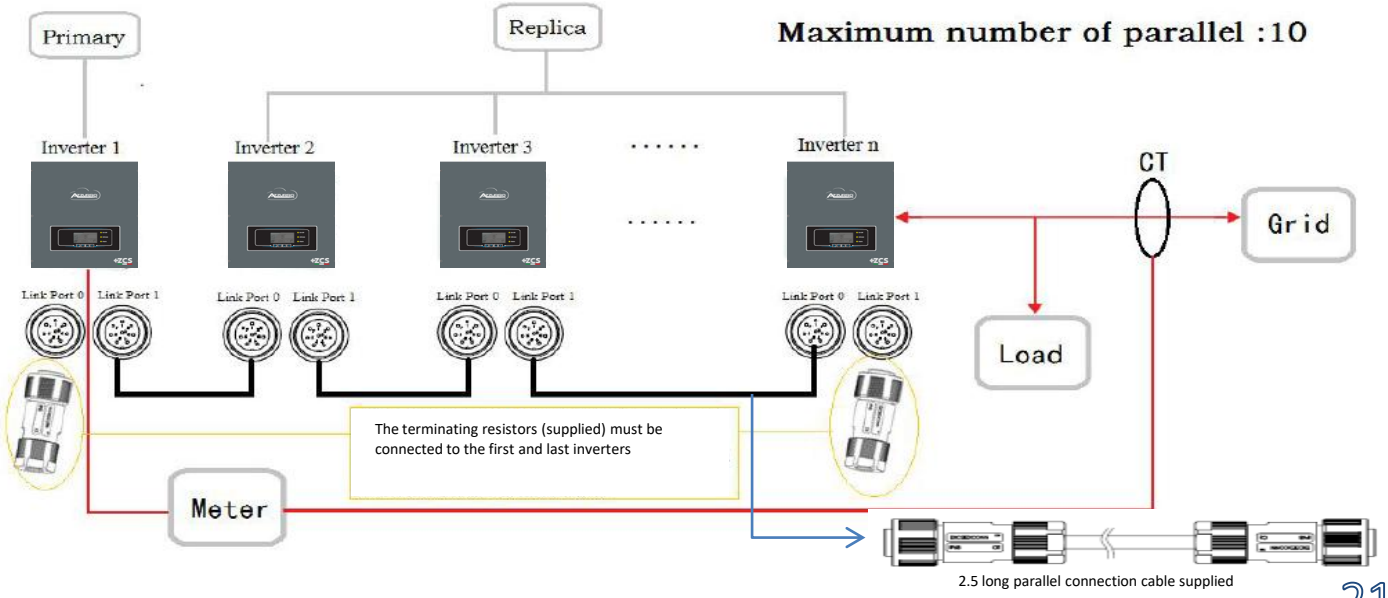

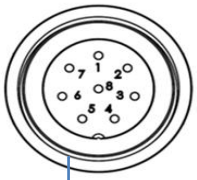

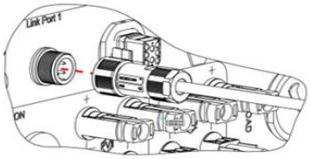

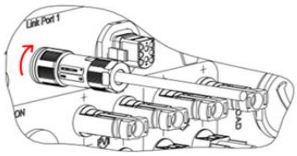

PIN	Definition	Function	Notes
1	IN_SYN0	Synchronizing signal0	The high level of the synchronizing signal is 12V
2	CANL	CAN low data	
3	SYN_GND0	Synchronizing signal GND0	
4	CANH	CAN high data	
5	IN_SYN1	Synchronizing signal1	
6	SYN_GND1	Synchronizing signal GND1	
7	SYN_GND2	Synchronizing signal GND2	
8	IN_SYN2	Synchronizing signal2	

18.2 PARALLEL INVERTER MODE - SETTINGS

2. Advanced settings

Psw 0001

7.Parallel settings

OK

1.Parallel Control	Enable / disable
2.Parallel Master-Slave	Primary / Replica
3.Parallel Address	00 (Primary) 01 (replica 1) ... 0n (Replica n)
4.Save	ok

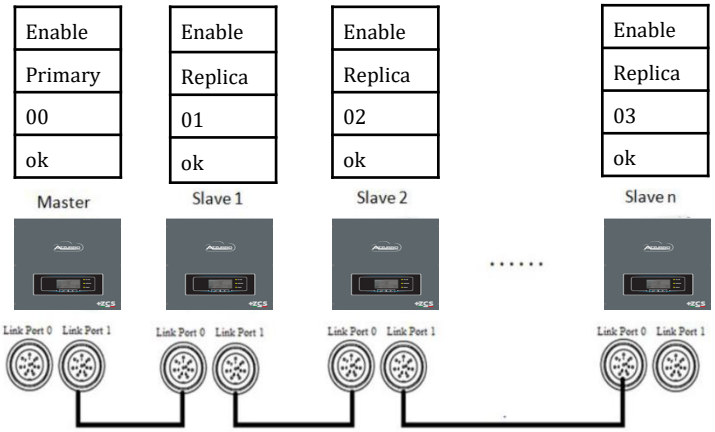

19. OPERATION OF PHOTOVOLTAIC SYSTEM ONLY

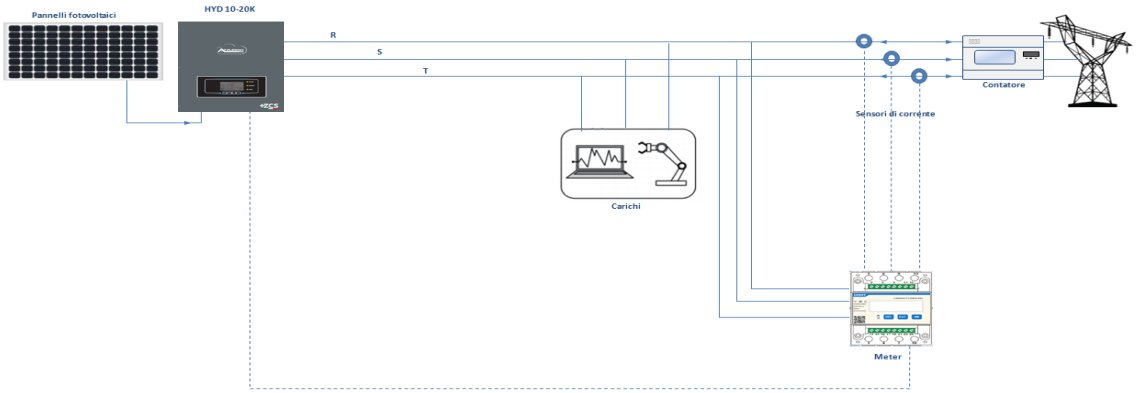

The system can also work as a photovoltaic inverter only, and therefore without batteries.

In this case, the display will only show the values relating to:
.Photovoltaic production
.Load consumption
.Power exchanged with the grid

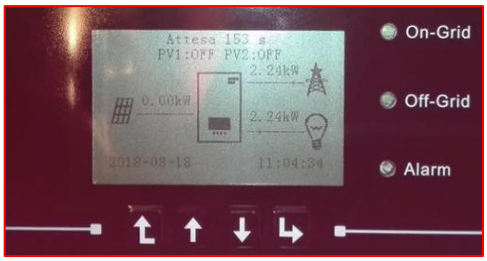

NOTE: In this case, the AC wire must be connected to the GRID port