USER'S MANUAL

AZZURRO ZCS

THREE-PHASE STRING INVERTER

3PH 250-255KTL HV

ZUCCHETTI Centro Sistemi

GREEN INNOVATION

Grid-connected inverter
3PH 250KTL-255KTL
User Manual

Identification: MD-AL-GI-00
Rev. 0.0 of 20/10/2022 - Application: GID

Zucchetti Centro Sistemi S.p.A. - Green Innovation Division
Via Lungarno, 248 - 52028 Terranuova Bracciolini - Arezzo, Italy
tel. +39 055 91971 - fax. +39 055 9197515
innovation@zcscompany.com - zcs@pec.it – **www.zcsazzurro.com**

Pile Reg. IT12110P00002965 - Share Capital € 100,000.00 fully paid up
AR Companies Reg. no. 03225010481 - REA AR - 94189
ISO 9001 Certified Company - Certificate no. 9151 - CNS0 - IT-17778

Table of Contents

General instructions

This manual contains important safety instructions that must be followed during installation and maintenance of the equipment.

Please keep these instructions!

This manual must be considered an integral part of the equipment, and must be available at all times to everyone who interacts with the equipment. The manual must always accompany the equipment, even when it is transferred to another user or plant.

Copyright statement

Please check our website http://www.zcsazzurro.com for the latest version.

Technical support

ZCS offers a support and technical consultancy service accessible by sending a request directly from the website www.zcsazzurro.com
For the Italian territory, the following toll-free number is available: 800 72 74 64.

Preface

General information

Please read this manual carefully before installation, use or maintenance.
This manual contains important safety instructions that must be followed during installation and maintenance of the system.

- ## Scope

This manual describes the assembly, installation, electrical connections, commissioning, maintenance and troubleshooting of the following inverters:

3PH 250KTL-HV / 3PH 255KTL-HV

Keep this manual so that it is accessible at all times.

- ## Recipients

This manual is intended for qualified technical personnel (installers, technicians, electricians, technical support personnel or anyone who is qualified and certified to operate a photovoltaic system), who are responsible for installing and starting the inverter in the photovoltaic system and for operators of the photovoltaic system.

- ## Symbols used

This manual provides information for safe operation and uses certain symbols to ensure the safety of personnel and materials, and for efficient use of the equipment during normal operation. It is important to understand this information to avoid accidents and damage to property. Please take note of the following symbols used in this manual.

Danger	**Danger: indicates a hazardous situation which, if not resolved or avoided, could result in serious personal injury or death.**
Warning	**Warning: indicates a hazardous situation which, if not resolved or avoided, could result in serious personal injury or death.**
Caution	**Caution: indicates a hazardous situation which, if not resolved or avoided, could result in minor or moderate personal injury.**
Attention	**Attention: indicates a potentially hazardous situation which, if not resolved or avoided, could result in damage to the system or other property.**
	Note: provides important tips on the correct and optimal operation of the product.

1. Preliminary safety instructions

Note	**If you have problems or questions regarding the reading and understanding of the following information, please contact Zucchetti Centro Sistemi S.p.A. through the appropriate channels.**

General information in this chapter

Safety instructions

It mainly highlights the safety instructions to be followed during installation and use of the equipment.

Symbols and icons

Introduces the main safety symbols on the inverter.

1.1. Safety instructions

Before installing and using the equipment, make sure you read and understand the instructions in this manual and familiarise yourself with the relative safety symbols shown in this chapter.

Depending on national and local requirements, permission must be obtained from your local provider before connecting to the electrical grid, making sure that the connections are carried out by a qualified electrician.

Contact the nearest authorised service centre for any repairs or maintenance. Contact your distributor for information on the nearest authorised service centre. DO NOT carry out repairs yourself, as this may result in injury or damage.

Before installing and operating the equipment, the electrical circuit of the strings must be disconnected by opening the string circuit breaker to interrupt the high-voltage DC of the photovoltaic system. Failure to do so could result in serious injury.

Qualified personnel

Ensure that the operator has the necessary skills and training to operate the equipment. Personnel responsible for use and maintenance of the equipment must be qualified and capable of performing the activities described, and must also have appropriate knowledge on how to correctly interpret the contents of this manual. For safety reasons, this inverter can only be installed by a qualified electrician with the necessary training and/or skills and knowledge. Zucchetti Centro Sistemi S.p.A. declines all responsibility for damage to property or personal injury caused by incorrect use of the device.

Label and Symbols

ZCS AZZURRO 250/255KTL-HV has type label attach the side of product which contact important information and technical data, the type label must permanent attached to the product.
ZCS AZZURRO 250/255KTL-HV has warming symbol attache the product which contact information of safety operation. The warming symbol must permanent attached to the product.

Installation requirements

Install and start the inverter according to the following instructions. Place the inverter on suitable load-bearing supports with sufficient load capacity (such as walls or photovoltaic racks) and make sure that the inverter is positioned vertically. Choose a suitable location for the installation of the electrical equipment. Make sure there is sufficient space for heat dispersion and to accommodate future maintenance. Maintain

adequate ventilation and ensure that there is enough air circulation for cooling. Air humidity should less than 90%.

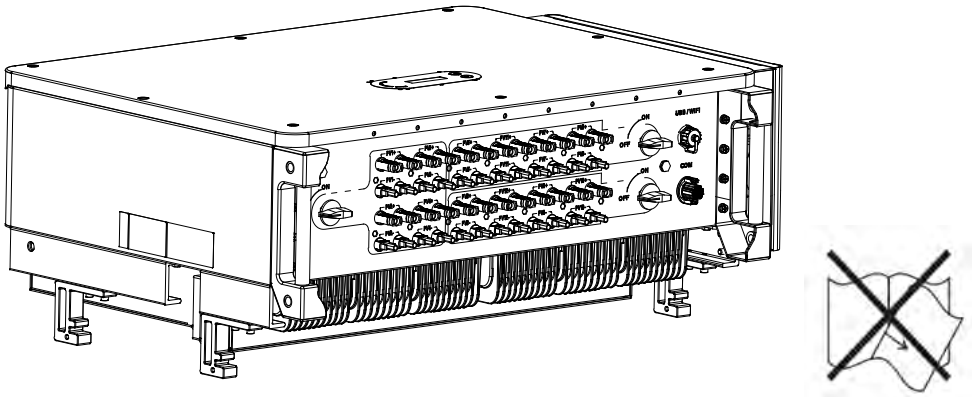

Figure 1 – Do not lose or damage this manual

Transport requirements

If you encounter problems with the packaging, or if you find any visible damage, please notify the transport company immediately. If necessary, request assistance from an installer of photovoltaic systems or from Zucchetti Centro Sistemi S.p.A. Transport of the equipment, especially by road, must be carried out with vehicles suitable to protect the components (in particular, electronic components) against violent knocks, humidity, vibrations, etc.

Electrical connections

Please pay attention to the electrical regulations on accident prevention when dealing with photovoltaic inverters.

Danger	**Before connecting the mains power, be sure to disconnect the photovoltaic modules by disconnecting all the DC switches of the generator. When exposed to the sun, the photovoltaic panels produce a voltage that can be dangerous!**
Warning	**All installation operations must be carried out by a professional electrician, who must:** • **Be prepared.** • **Carefully read this manual and understand its contents.**
Attention	**Before connecting the inverter to the grid, make sure that all the necessary permits have been obtained from the local grid operator and that all the electrical connections are made by a professional electrician.**
Note	**Do not remove the information label or open the inverter.** **Otherwise, ZCS will not provide any warranty or maintenance.**

Operation

Danger	**Contact with the electrical grid or the terminal of the equipment may cause electrocution or fire!** • **Do not touch the terminal or the conductor connected to the electrical grid.** • **Follow all the instructions and safety requirements relating to the mains connection.**
Attention	**Some internal components reach very high temperatures when the inverter is in operation. Wear protective gloves!**

Maintenance and repair

Danger	• **Before carrying out any repairs, disconnect the inverter from the mains network (AC side) and from the photovoltaic system (DC side).** • **After switching off the AC and DC switches, wait 5 minutes before carrying out any repairs or maintenance on the inverter!**
Attention	• **The inverter should start working again after any faults have been fixed. For any repairs, contact your local authorised service centre;** • **Do not disassemble the internal components of the inverter without permission. This will void the warranty. Zucchetti Centro Sistemi S.p.A. shall not be responsible for any damage or loss caused by these actions.**

EMC/Noise Level

Electromagnetic compatibility (EMC) refers to that on electrical equipment functions in a given electromagnetic environment without any trouble or error, and impose no unacceptable effect upon the environment. Therefore, EMC represents the quality characters of an electrical equipment.

- The inherent noise-immune character: immunity to internal electrical noise
- External noise immunity: immunity to electromagnetic noise of external system
- Noise emission level: influence of electromagnetic emission upon environment

Danger	**Electromagnetic radiation from inverter may be harmful to health!** **Please do not continue to stay away from the inverter in less than 20cm when inverter is working**

1.2. Symbols and icons

Safety signals

Danger	**High voltage of inverter may be harmful to health! Only qualified personnel can operate the product.** **Keep this product out of the reach of children.**
Caution	**Pay attention to possible burns due to hot parts.** **Only touch the screen or press the keys while the inverter is in operation.**
Attention	**The PV strings should be connected to the ground in accordance with the local regulations!** **To ensure the safety of the system and people, the inverter and photovoltaic strings must be securely connected to the ground.**
Warning	**Ensure the correct DC input voltage; which must be below the maximum allowable DC voltage. Overvoltage can cause permanent damage to the inverter or other faults which are not covered by the warranty!**

Symbols on the inverter

Some safety symbols are located on the inverter. Read and understand the contents of the symbols before installing the inverter.

5min	Residual voltage may be present on the inverter! Before opening the inverter, wait 5 minutes to ensure that the capacitors are completely discharged.
	Beware of high voltage
	Beware of high temperatures
CE	Complies with the European Standards (CE)

	Ground connection point
	Read this manual before installing the inverter.
	Indication of the allowable temperature range
	Positive and negative polarities of the input voltage (DC).
	RCM (Regulatory Compliance Mark). The product complies with the requirements of the applicable Australian standards.

2. Product features

General information in this chapter

Product overview

The field of use and overall dimensions of the 3PH 250KTL-255KTL-HV inverters are indicated in this section.

Description of functions

It describes how the 3PH 250KTL-255KTL-HV inverters and their internal operating modules work.

Efficiency curve

Describes the efficiency curves of the inverter.

2.1. Product presentation

Field of use

The 3PH 250KTL-255KTL inverters are grid-connected photovoltaic inverters equipped with 8-12 MPPT, capable of converting the direct current generated by the photovoltaic strings into three-phase sine wave alternating current and feeding the energy to the public electricity grid. An AC circuit breaker must be used as a disconnecting device and must always be easily accessible.

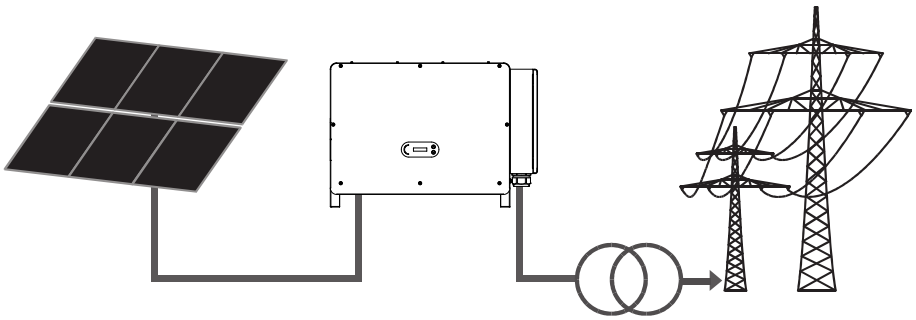

Figure 2 – Grid-connected photovoltaic system

The 3PH 250KTL-255KTL-HV may only be operated with PV arrays (photovoltaic module and cabling) for on grid condition. Do not use this product for any other or additional purposes. Any damage or property loss due to any use of the product other than described in this section, Zucchetti Centro Sistemi will not take the responsibility. DC input of the product must be PV module, other source such like DC sources, batteries will against the warranty condition and ZCS will not take the responsibility.

Supported grid type

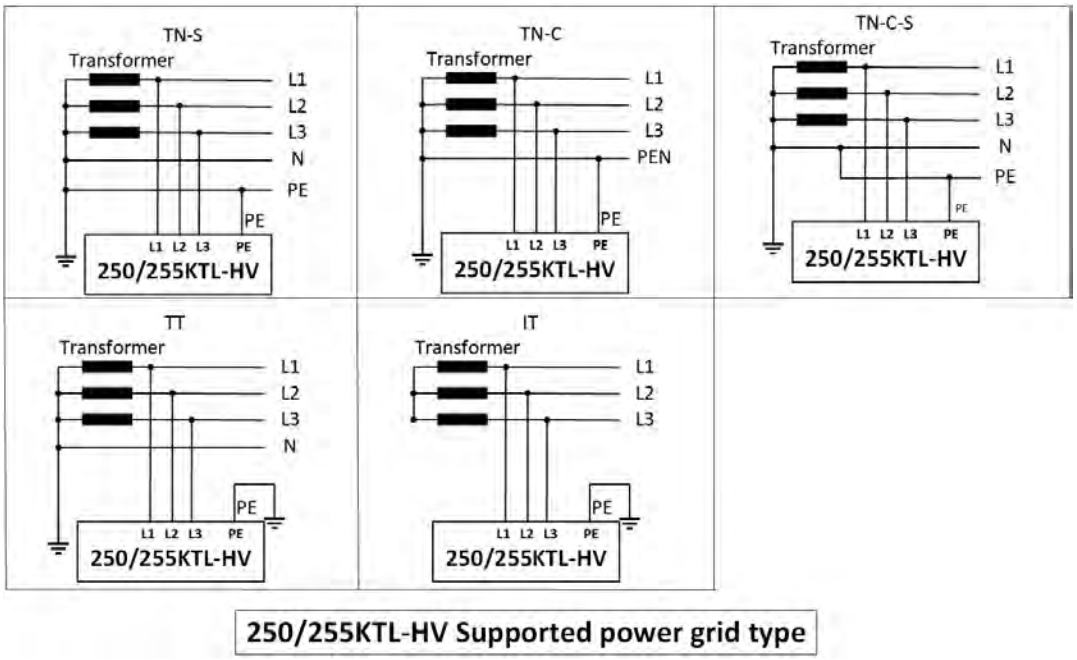

250/255KTL-HV Supported power grid type

Dimensions description

• Overall dimensions: L x W x H = 1100.5 mm x 713.5 mm x 368 mm

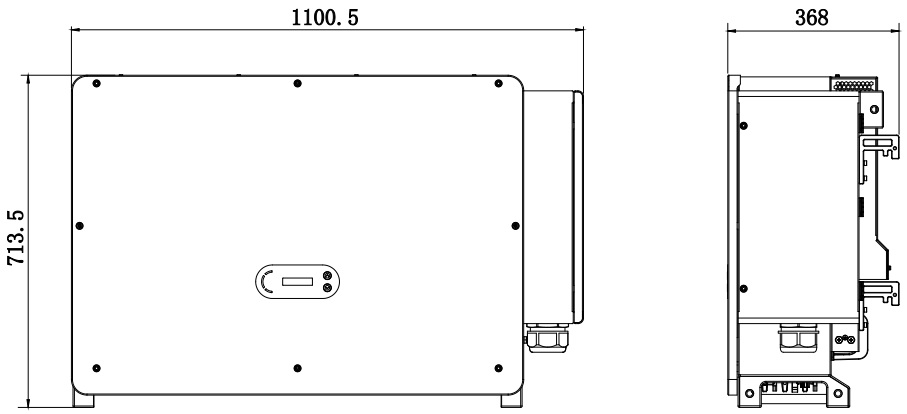

Figure 3 – Front, side and back view of the inverter and bracket

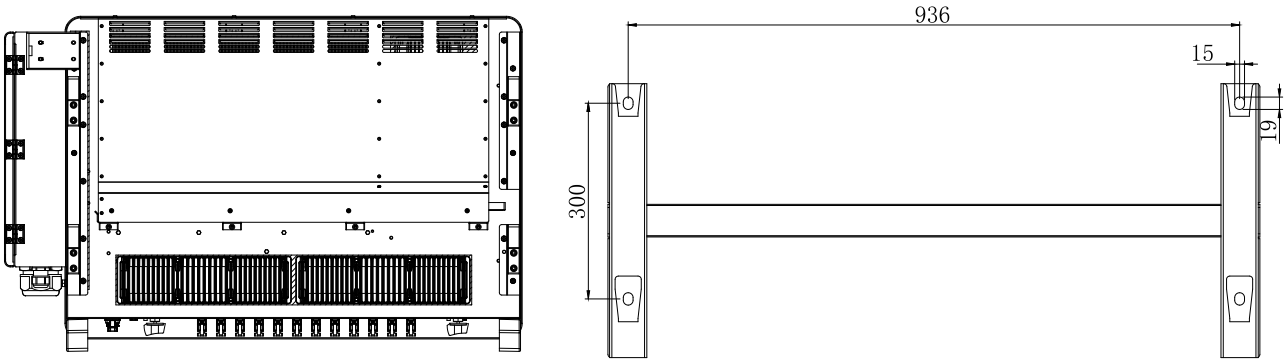

• Labels on the inverter

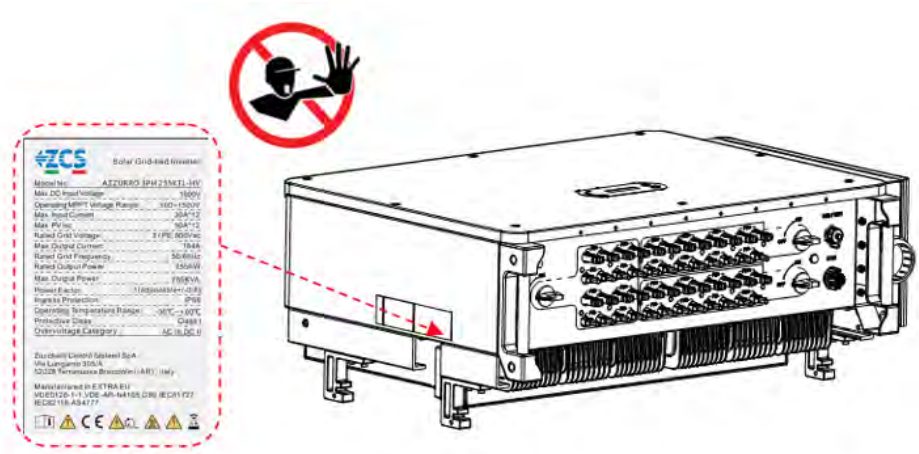

Figure 4 – Do not remove the label on the side of the inverter

2.2. Description of functions

The DC voltage generated by the PV modules is filtered through the input board before entering the power board. The input board also has the function of detecting the insulation impedance and the DC input voltage/current. The power board converts the DC power into AC power. The current converted into AC is filtered through the output board and is then fed into the grid. The output board also has the function of measuring the grid and GFCI voltage/current and acts as an output insulation relay. The control board provides the auxiliary power supply, controls the operating status of the inverter and shows it on the display. The display also shows the error codes when the inverter is not functioning properly. At the same time, the control board can activate the protection relay in order to protect the internal components.

Electrical block diagram

AZZURRO 3PH 250KTL-255KTL-HV has 16-24 DC input strings. 8-12 MPPT trackers that converters the direct current of PV array to grid-compliant, three phase current and feeds in into the utility grid. Both DC and AC side has Surge Protection Device (SPD).

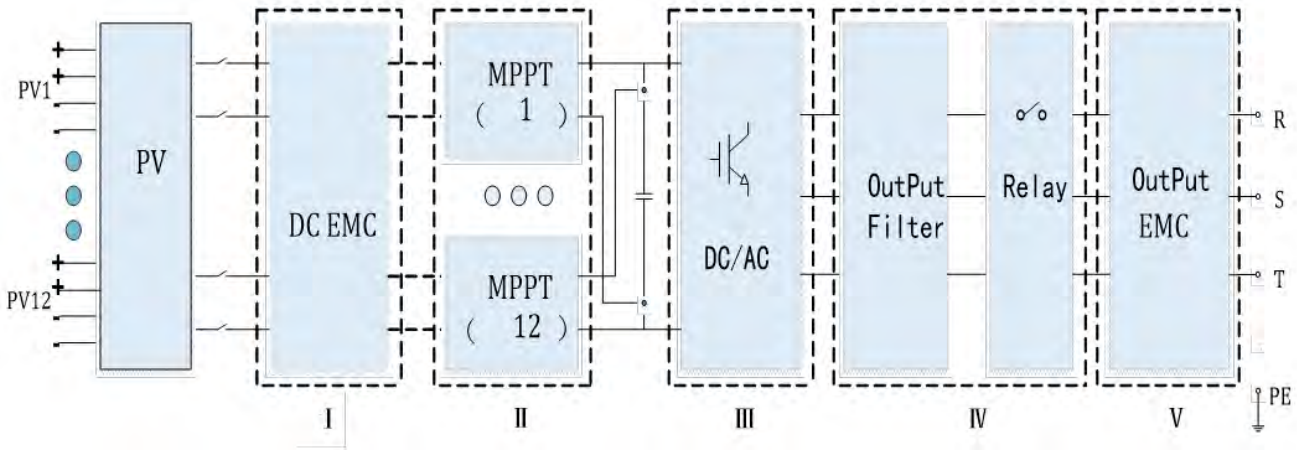

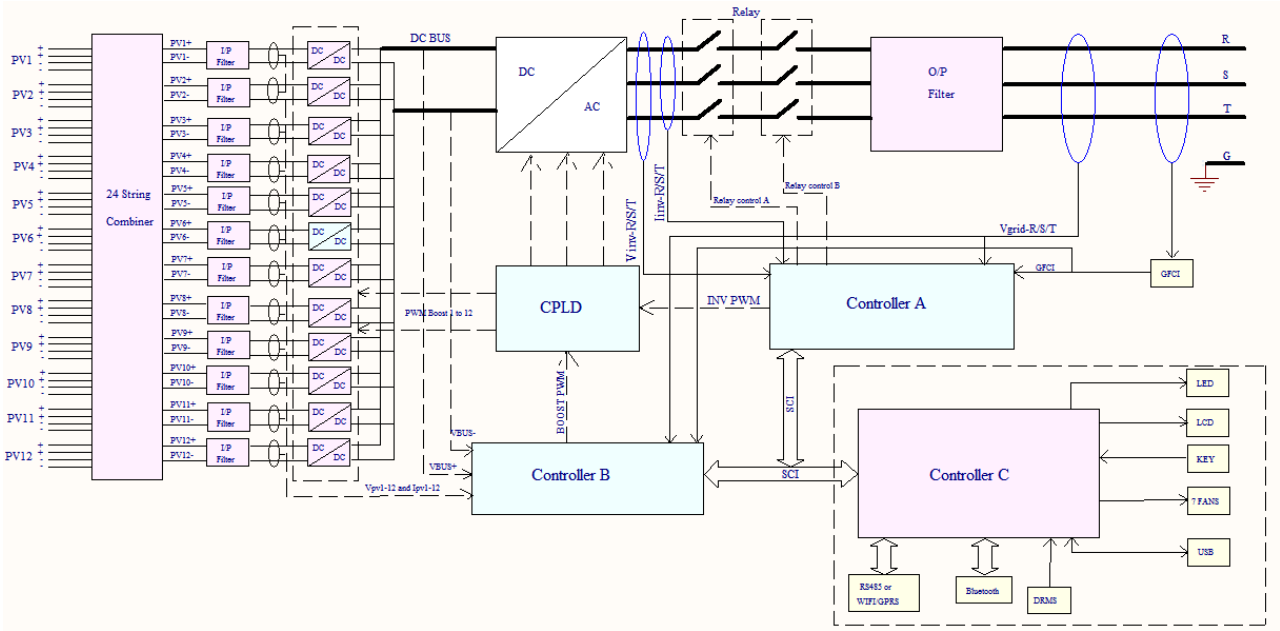

Figure 5 – Block diagram of the 3PH 250KTL-255KTL inverters

Inverter functions

A. Energy management unit

Remote control to start/ shunt down inverter through an external control.

B. Feeding reactive power into the grid

The inverter is able to produce reactive power thus to feed it into the grid through the setting of the phase shift factor. Feed-in management can be controlled directly by the grid company through a RS485 interface.

C. Limited the active power fed into the grid

If enable the limited of active power function, inverter can limit the amount of active power fed into the grid to the desired value (expressed as percentage).

D. Self-power reduction when grid is over frequency

When the grid frequency exceeds the limit set, the inverter reduces the power in order to ensure the stability of the grid.

E. Data transmission

The inverter (or a group of inverters) can be monitored remotely via an advanced communication system based on RS485 interface, via external data loggers, via Wi-Fi, GPRS or Ethernet.

F. Software update

USB interface for uploading the firmware, remotely uploading is available.

G. PID （optional function）

The PID effect can be recovered at night to protect the PV modules.

H. H. AFCI (optional function)

When the DC connector is not assembled in place, it is easy to cause arcing or overheating of the connector. This function can detect whether there is a fault arc at the input end of the inverter. When an arc occurs, the inverter stops grid connection and gives an alarm reminder, so as to build a safe barrier for the whole system.

2.3. Module protection

A. Anti-islanding

The inverter is equipped with a protection system that automatically shuts down the system during power outages. This is called an “anti-islanding” system. This protects electrical workers when they are trying to repair lines on the grid, in compliance with the applicable national laws and regulations.

B. RCMU

The inverters are equipped with a redundancy on the reading of the ground leakage current, on both the direct and alternating current sides. The ground leakage current is measured simultaneously and independently by two different processors: it is sufficient for one of the two to detect a fault in order to trigger the protection, resulting in separation from the grid and shutdown of the operation.

C. Grid monitoring

Continuous monitoring of the grid voltage to ensure that the voltage and frequency values stay within the operating limits.

D. Internal protection of the inverter device

The inverter has all kinds of internal protections to protect the device and internal components when abnormal situations occur on the grid or DC input line.

E. Ground fault protection

The inverter must be used with photovoltaic modules connected with “floating” connections, i.e. with positive and negative terminals that are not grounded. An advanced ground fault protection circuit continuously monitors the ground connection and disconnects the inverter when a ground fault is detected. The ground fault condition is indicated by a red LED on the front panel.

2.4. Efficiency and derating curves

Efficiency curve of ZCS Azzurro for the 3PH 250KTL-255KTL-HV family

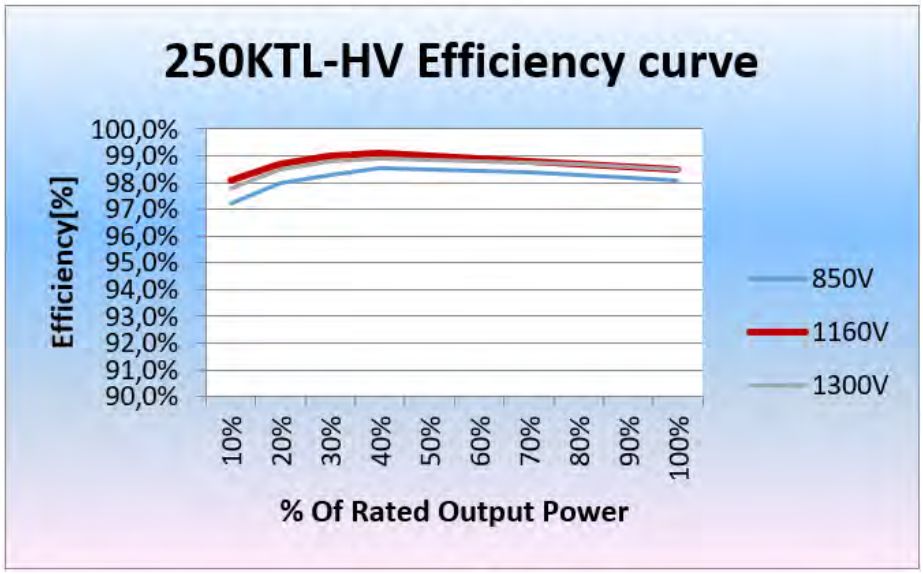

Figure 6 – Efficiency curve for ZCS Azzurro 3PH 250KTL-HV inverters

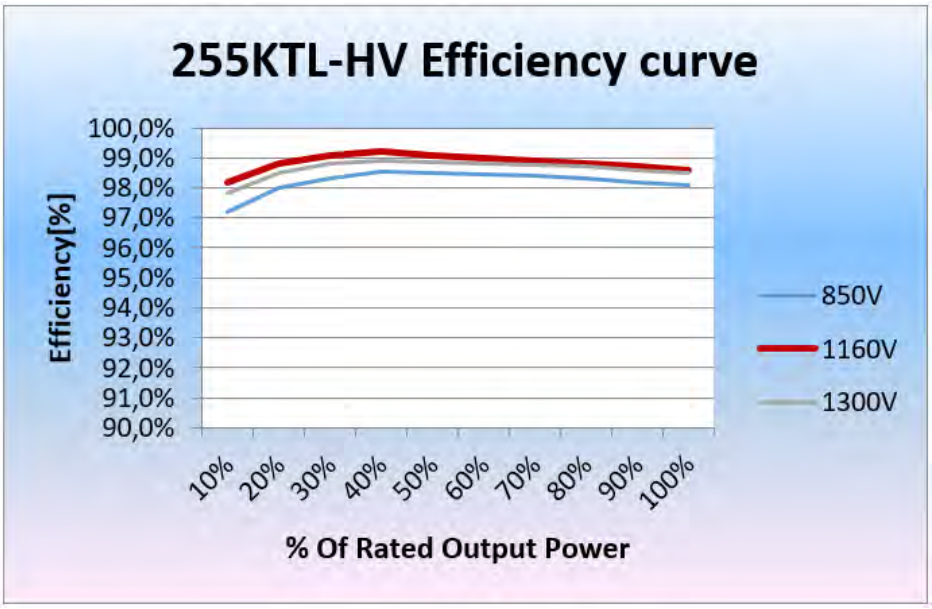

Figure 7 – Efficiency curve for ZCS Azzurro 3PH -255KTL-HV inverters

3. Inverter Storage

If inverter is not installing immediately, storage condition need meet below requirements:

- ✓ Place inverter into the original package and leave desiccant inside, sealed tight with taps.
- ✓ Keep the storage temperature around -40°C～70°C, Relative humidity 0～95%, no condensation.

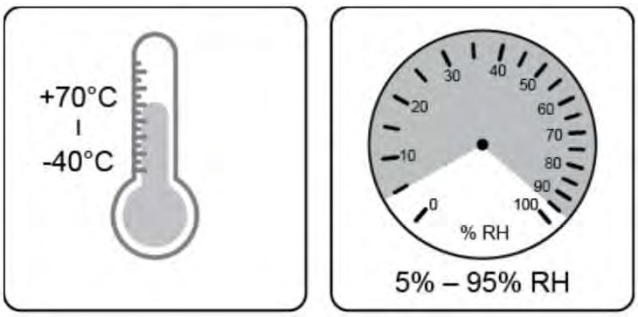

Storage temperature and humidity

- ✓ The maximum stacking layer number cannot exceed 4 layers.
- ✓ If the inverter be storage for more than half years, the inverter needs to be fully examined and tested by qualified service or technical personnel before using.

4. Installation

General information in this chapter

This chapter describes how to install the 3PH 250KTL-255KTL-HV inverter.

Installation notes:

Danger	• **DO NOT install 3PH 250KTL-255KTL-HV inverters near flammable materials.** • **DO NOT install 3PH 250KTL-255KTL-HV inverters in an area where flammable or explosive materials are stored.**
Warning	**The housing and heat sink may become very hot while the inverter is running, DO NOT install the inverter in places where they may be touched inadvertently.**
Attention	• **Consider the weight of the inverter when handling and transporting the inverter.** • **Choose an appropriate mounting position and surface.** • **Assign at least two people to install the inverter.**

A. Installation process
This section describes the process for installing the 3PH 250KTL-255KTL-HV inverter

B. Checks before installation
This section describes the checks to carry out on the outer packaging, on the inverter and its components.

C. Installation tools
This section describes the tools needed to install the inverter and to make the electrical connections.

D. Installation position
This section describes the characteristics of the installation site of the inverter.

E. Moving the inverter
This section describes how to move the inverter to the installation site.

F. Installing the inverter
This section describes the steps for mounting the inverter on the wall.

4.1. Installation process

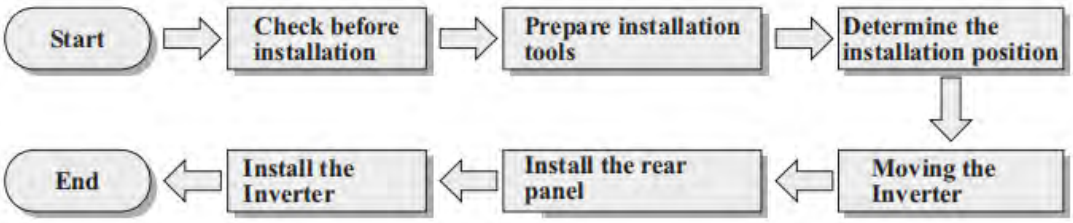

Figure 8 - Installation steps

4.2. Checks before installation

Checking the outer packaging

Packaging materials and components may be damaged during transport. Therefore, please check the materials of the outer packaging before installing the inverter. Check the surface of the box for external damage such as holes or tears. If any kind of damage is found, do not open the box containing the inverter and contact the supplier and transport company as soon as possible.
It is recommended to remove the packaged materials from the box 24 hours before installing the inverter.

Checking the product

After removing the inverter from its packaging, check that the product is intact and complete. If any damage is found or components are missing, contact the supplier and transport company.

Contents of the packaging

Carefully check the contents of the packaging before installation, making sure that no element inside the packaging is missing or damaged.
The package should contain the following components:

No.	Pictures	Description	Quantity
1	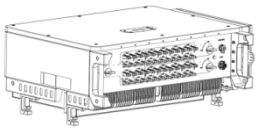	AZZURRO 3PH 250KTL-255KTL-HV	1 PCS
2		Rear Panel	1 PCS
3	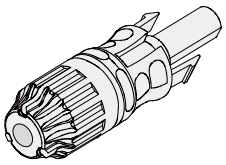	PV+ input connector	24PCS

4	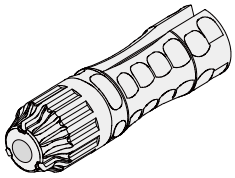	PV- input connector	24PCS
5	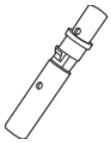	PV+ metal pin	24PCS
6	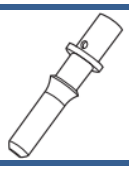	PV- metal pin	24PCS
7	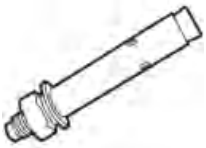	M10*90Hexagon screws	4 PCS
8	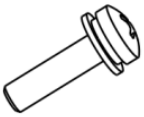	M4X14 Cross round head triple set screw (Only for DC switch lock)	1 PCS
9	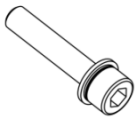	M6*30 Hexagon screws	2 PCS
10		Manual	1PCS
11		Warranty Card	1PCS
12	 AZZURRO S.r.l. GENTILE CLIENTE, TI RICORDIAMO DI ACCEDERE ALLA SEZIONE ESTENSIONE GARANZIA DEL SITO www.azzurro.com PER ESTENDERE LA GARANZIA DEL TUO INVERTER COME INDICATO NEI T&C DEAR CUSTOMER, WE REMIND YOU TO ACCESS THE WARRANTY EXTENSION SECTION OF THE SITE www.azzurro.com TO EXTEND THE WARRANTY OF YOUR INVERTER AS WROTE ON THE T&C	Quality Certificate	1PCS

13	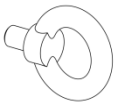	M12 lifting bolt	2PCS
14	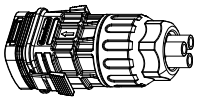	COM 16pin connector	1PCS
15	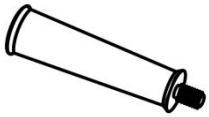	auxiliary handle	4PCS

4.3. Installation tools

The following tools are required for installation of the inverter and electrical connections; therefore, they must be prepared before installation.

No.	Tool		Function
1		Drill Recommended drill bit: 10mm	To drill holes in the wall for fixing the bracket
2	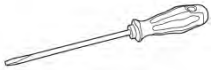	Screwdriver	To screw and unscrew screws for the various connections
3	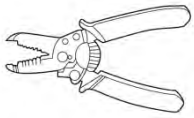	Wire stripper	To prepare the cables for wiring
5	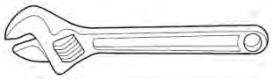	Adjustable spanner (opening greater than 32 mm)	To tighten the bolts
6		4 mm Allen key 6 mm Allen key	To screw the inverter to the wall-mounting bracket and to open the front cover of the inverter
7	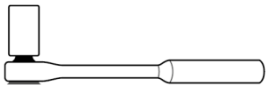	M5 socket wrench	To tighten the bolts

8	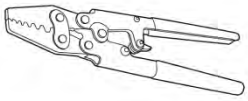	RJ45 crimping tool	To crimp the RJ45 connectors for the communication cables
9		Rubber hammer	To insert the expansion plugs into the wall holes
10		MC4 removal tool	To remove the DC connectors from the inverter
11		Diagonal pliers	To cut and tighten the cable ends
12	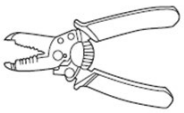	Wire stripping tool	To remove the outer sheath of the cables
13		RJ45	2 pieces
14	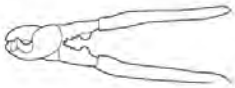	Cable cutter	To cut the power cables
15	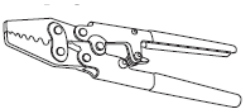	Crimping tool	To crimp the power cables
16	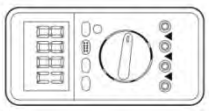	Multi-meter	To check the voltage and current values
17		Marker pen	To mark the wall for better fixing precision
18	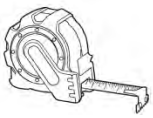	Measuring tape	To measure distances

19	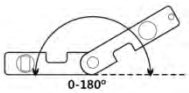	Level	To make sure the bracket is level
20	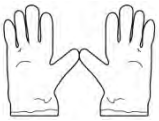	ESD gloves	Protective clothing
21		Safety goggles	Protective clothing
22		Protection mask	Protective clothing

4.4. Installation position

Choose an appropriate installation location for the inverter.

Follow the requirements below to determine the installation position.

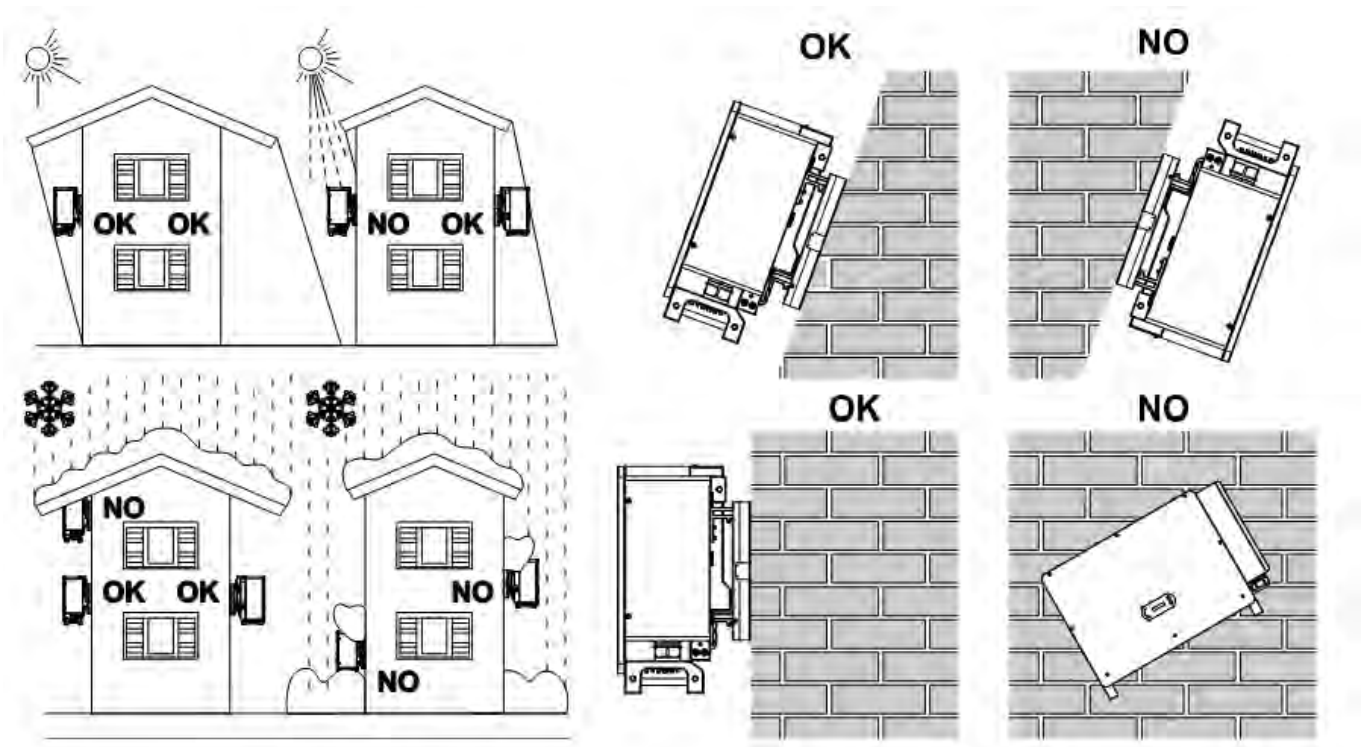

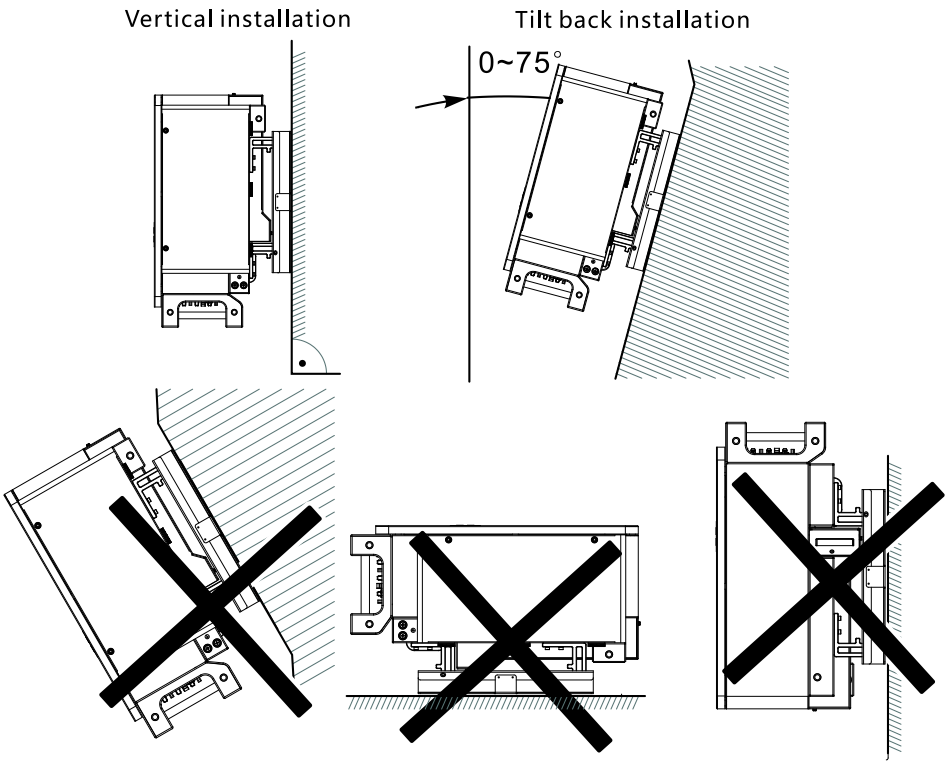

Figure 9 – Requirements for installing a single inverter

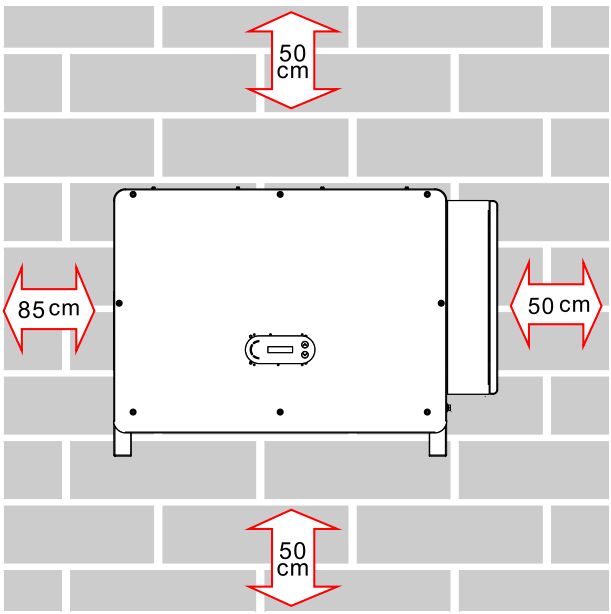

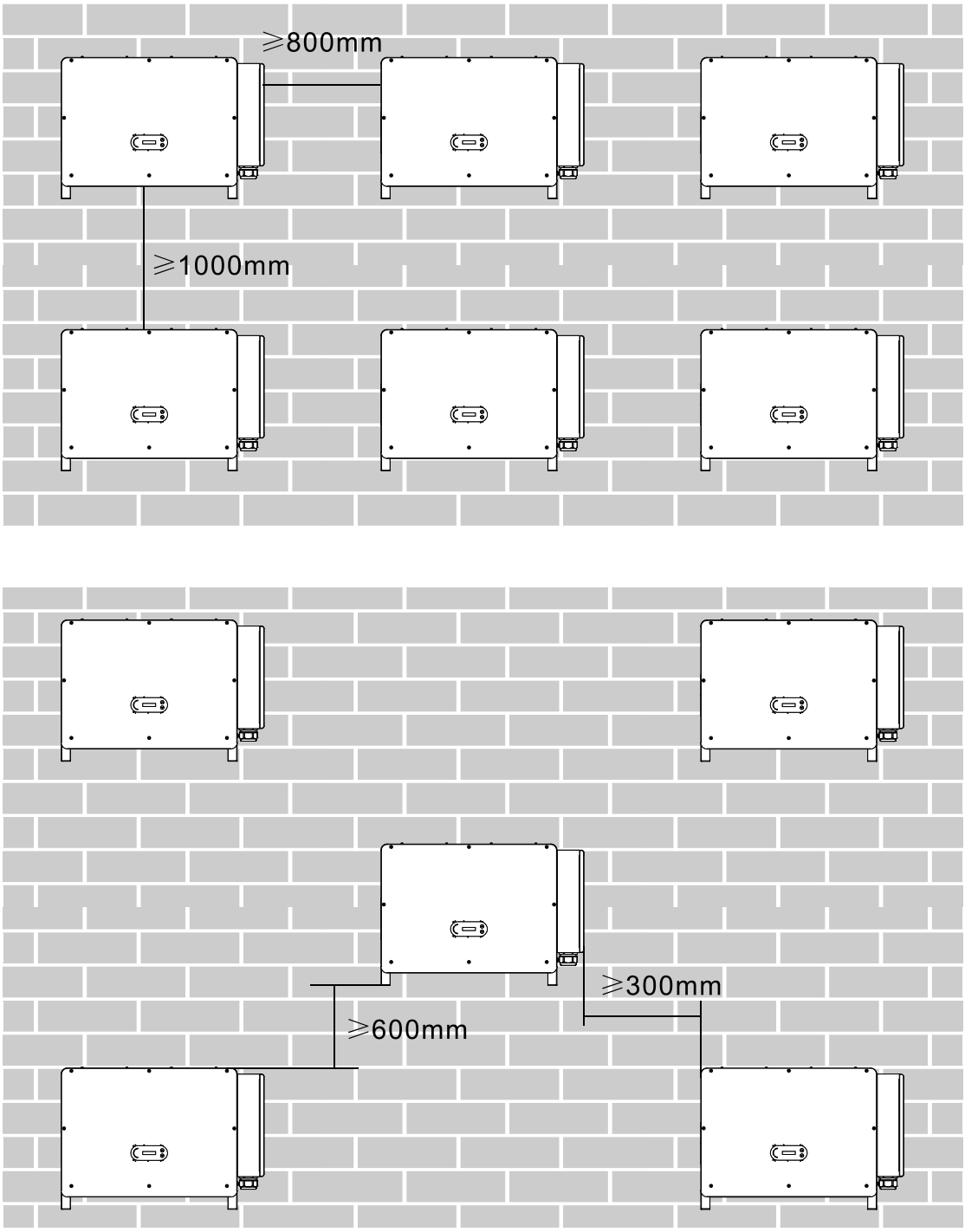

Figure 10 – Requirements for installing multiple inverters

Note: For safety reasons, ZCS S.p.A. and/or its partners may not carry out any technical repairs or maintenance work, or move the inverter from and to the ground if it is installed at a height of more than 180 cm from the ground.
Inverters installed at higher heights must be moved to the ground before they can be repaired or serviced.

4.5. Moving the 3PH 250KTL-255KTL-HV inverter

This section describes how to move the inverter correctly

1) When opening the packaging, insert your hands into the slots on both sides of the inverter and take a hold of it as shown in Figure below. Two people are needed to carry out this operation in order to ensure the safety of people and the correct handling of the inverter.

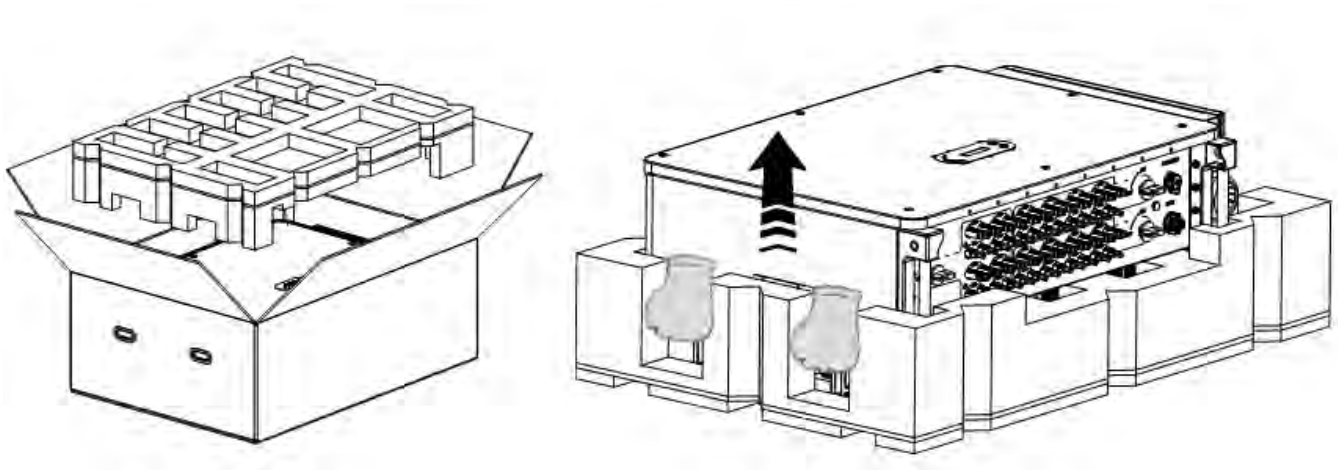

Figure 11 – Removing the inverter from its packaging

2) Lift the inverter from its packing box and move it to the installation position.

⚠ **Attention**	• **To prevent damage and personal injury, hold the inverter firmly when moving, as it is a heavy piece of equipment.** • **Do not position the inverter with the input/output terminals in contact with other surfaces, as these are not designed to support the weight of the inverter. Always position the inverter horizontally.** • **When placing the inverter on the floor, make sure to place a support under the unit to protect its front door.** • **Use auxiliary handle inside the package for moving the inverter. After use, keep it well for future usage.**

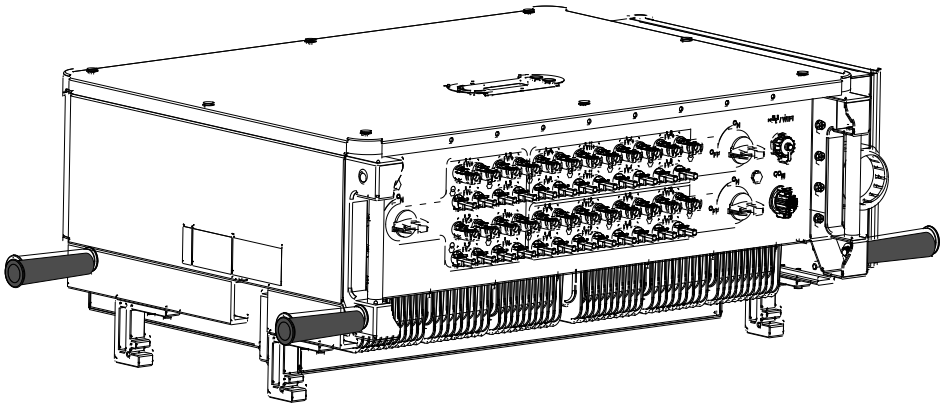

Figure 12 – Auxiliary handle position

3) Lifting equipment.

Tighten the screws of two M12 rings into the inverter sides according to the instruction diagram below (Note: M12 rings need self-preparation).

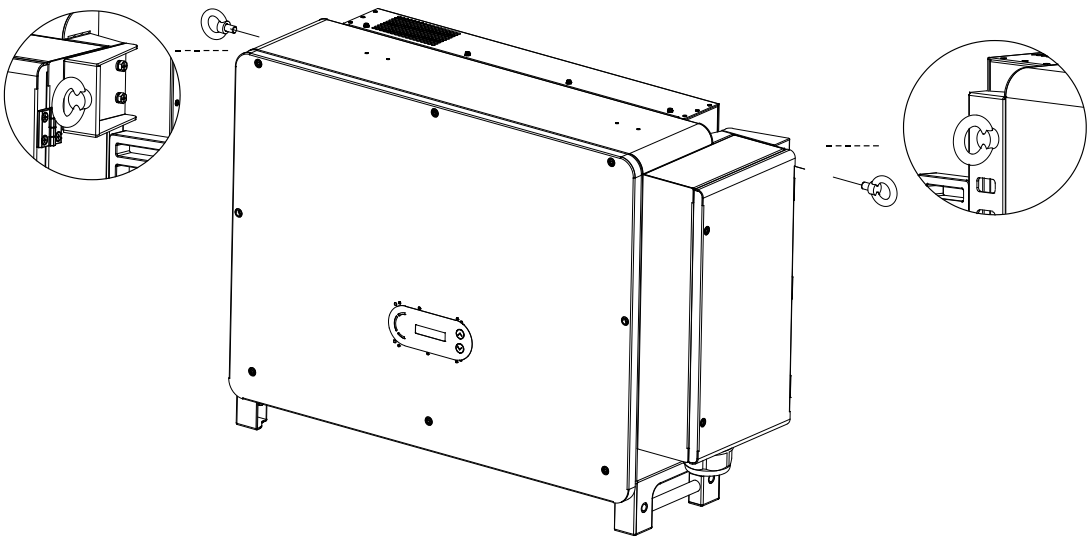

Figure 13 – Installation of rings

Fastened and tied the rope through two rings. Lifting inverter 50 mm above ground by using lifting equipment, check the tightening device of the hoisting ring and rope. After confirming that the binding connection is secure, lift the inverter to the destination.

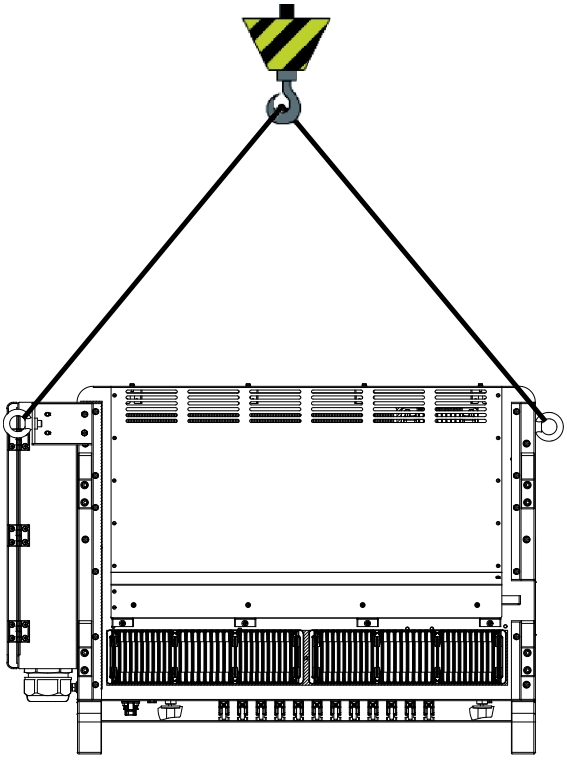

Attention	• **Keep balance when lifting the inverter, avoid to crash on wall or other objective .** • **Stop working in bad weather condition such as raining, heavy fog, winding.**

4.6. Installing the 3PH 250KTL-255KTL-HV inverter

1) Placed the rear panel on the mounting wall, determine the mounting height of the bracket and mark the mounting poles accordingly. Drilling holes by using Hammer Drill, keep the hammer drill perpendicular to the wall and make sure the position of the holes should be suitable for the expansion bolts.

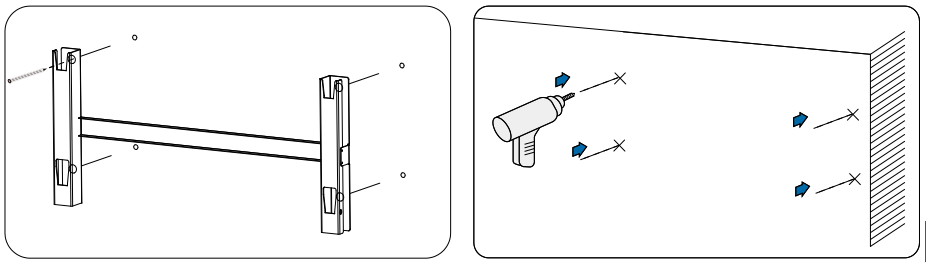

Figure 14 - Drilling holes on the mounting wall

2) Insert the expansion bolt vertically into the hole.

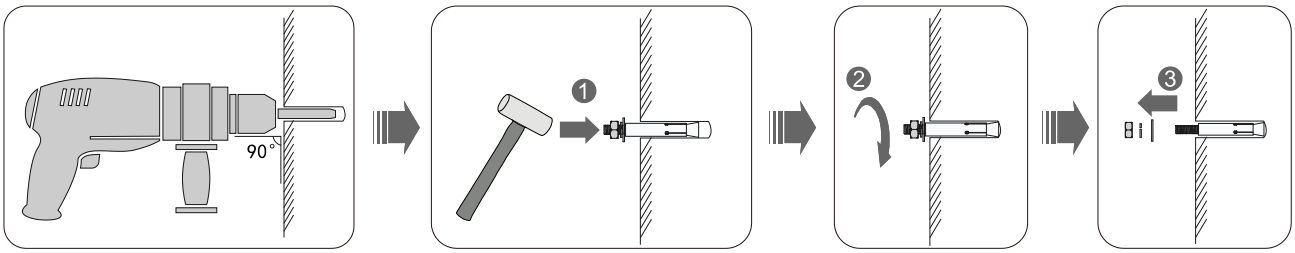

Figure 15 - Screws into the holes

3) Align the rear panel with the hole positions, fix the rear panels on the wall by tightening the expansion bolt with the nuts.

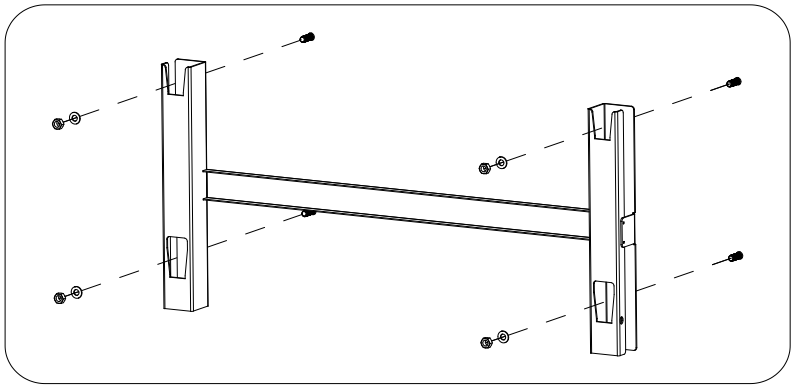

Figure 16 - Install rear panel

4) Lift the inverter and hang it on the rear panel,and fixing both side of inverter with M6 screw (accessories).

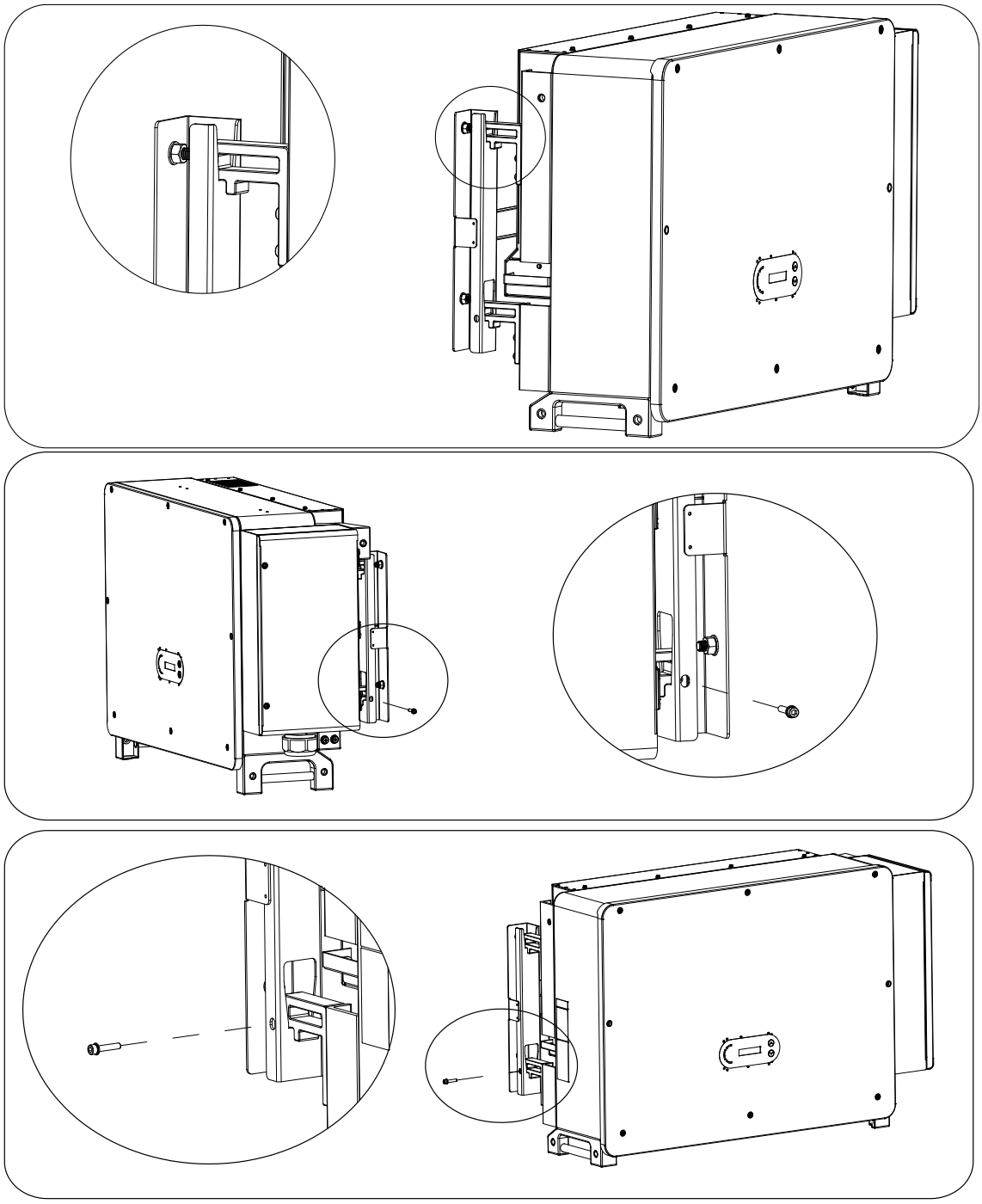

Figure 17 - Fix inverter

5) Use wall mount bracket, ensure the pole position are in same level by using level rule and take a mark with maker.

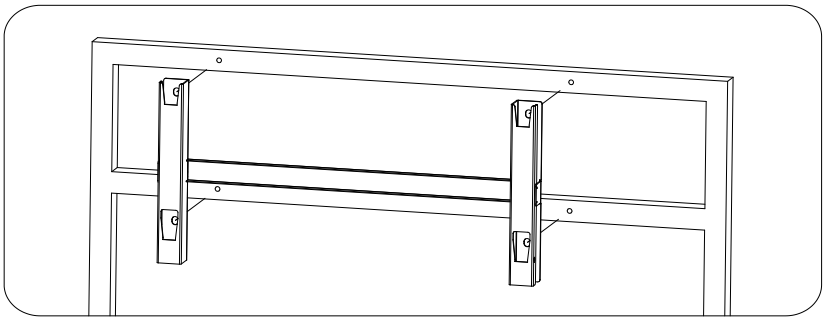

Figure 18 - Ensure hole position

6) Drilling hole by using Hammer Drill, recommend to do a stain proofing.

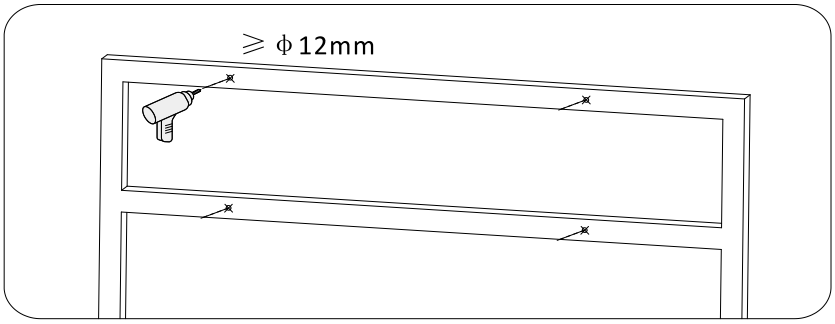

Figure 19 - Drilling holes

7) Use M10 screw and M10 flat washer to secure the wall bracket (Note : M10*50 screw and M10 flat washer need self-preparation).

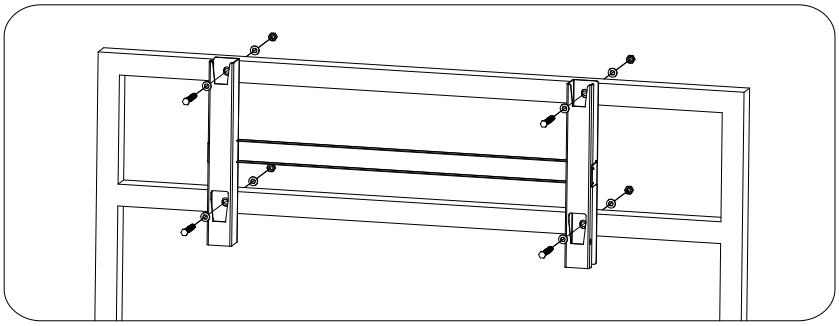

Figure 20 - Fix wall bracket

8) Repeat step 4).

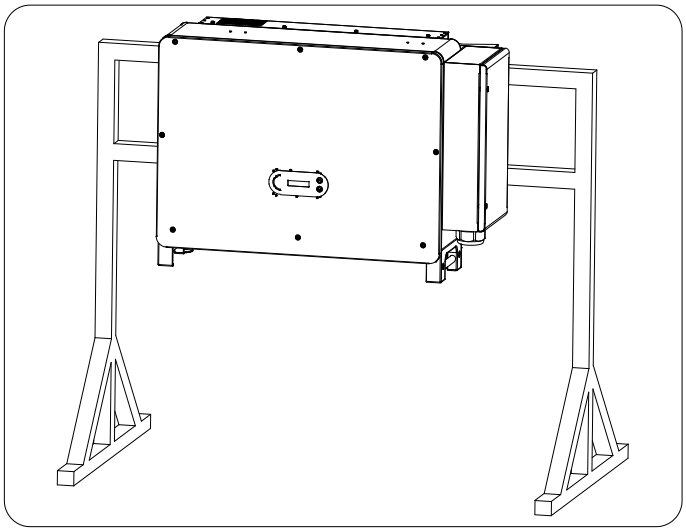

Note: if height between ground and bracket is less than 1.3m, use auxiliary handle for installation. Otherwise, use lifting equipment.

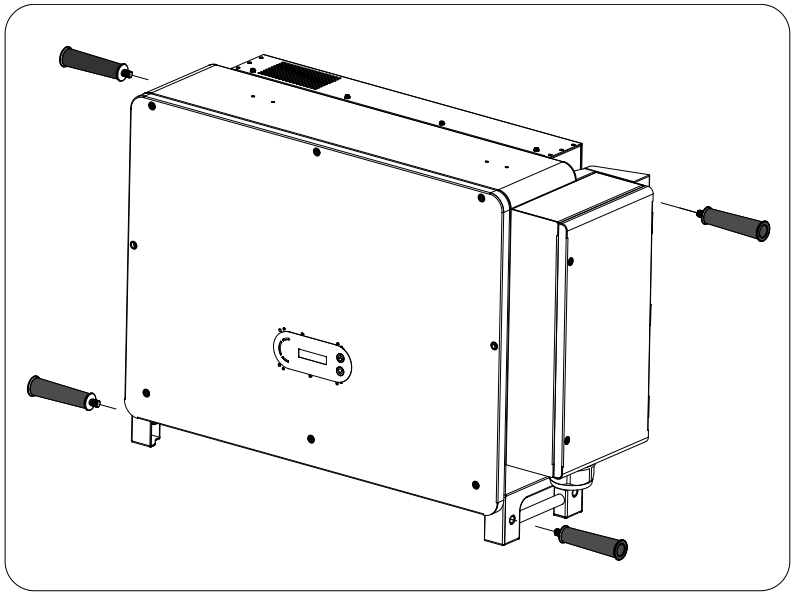

Figure 21 - Installation position of auxiliary handle

5. Electrical connections

General information in this chapter

This chapter describes the electrical connections of the 3PH 250KTL-255KTL-HV inverter. Carefully read this section before connecting the cables.

NOTE: Before making any electrical connections, ensure that the DC and AC circuit breakers are open. Remember that the accumulated electrical charge remains in the inverter capacitor after the DC and AC circuit breakers have been switched off. Therefore, it is necessary to wait at least 5 minutes to allow the capacitor to discharge completely.

Attention	**The inverter must be installed and serviced by professional technicians or electricians.**
Danger	**The PV modules generate electricity when exposed to sunlight, which can pose a risk of electric shock. Before connecting the DC input power cord, be sure to disconnect the strings via the appropriate circuit breakers.**
Note	**The maximum open-circuit voltage of the photovoltaic string must be less than 1500 V.** **The 3PH 250KTL-255KTL-HV has 8-12 independent input channels (MPPT); all the photovoltaic modules connected to them must be of the same model and brand, and must be positioned with the same orientation (solar azimuth and inclination angle).**

4.1. Electrical connections
Describes the process for making the electrical connections.

4.2. Terminal connector
Introduce inverter terminal port layout.

4.3. Connecting the PNGD cable (grounding)
Describes the connection of the ground cable (PGND) for the ground of the inverter.

4.4. Connecting the AC output power cables
Describes the connection of the inverter to the AC grid using the AC power cables (following the granting of the grid connection by the distributor).

4.5. Connecting the DC input power cables
Describes the connection of the photovoltaic strings to the inverter using the DC power cables.

4.6. Connecting the communication cables
Introduce the propose WIFI/USB, COM and how to connect WIFI/USB port.

4.7. Safety check

Before operate inverter, check the PV array, inverter DC side safety connection and AC side safety connection.

5.1. Electrical connections

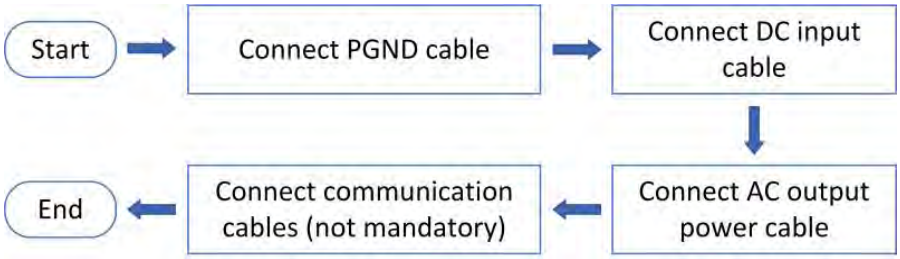

Figure 22 - Flowchart for connecting cables to the inverter

5.2. Terminal connector

Connector description as below:

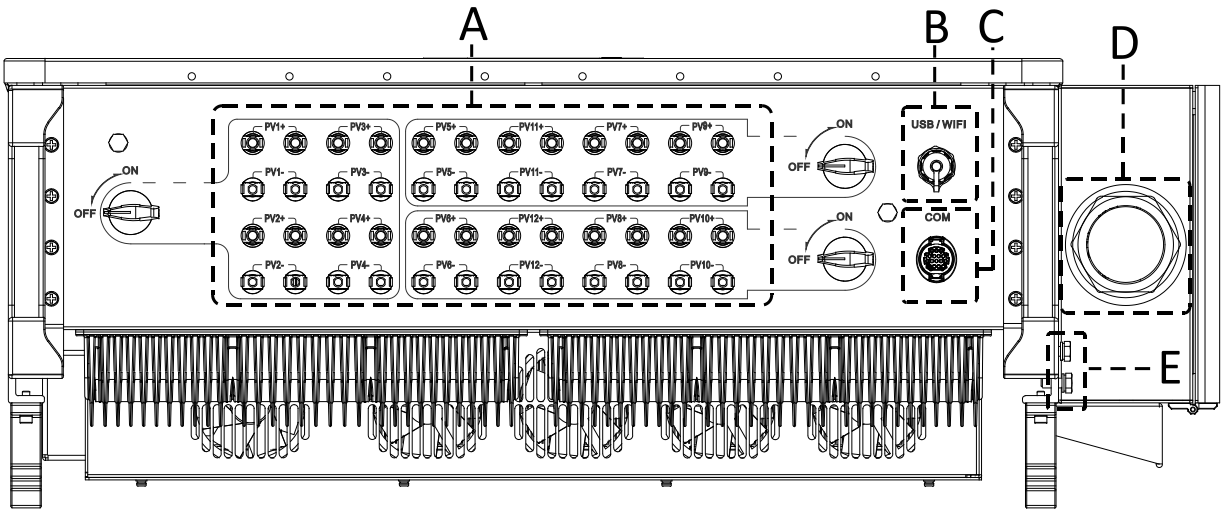

*take picture as reference

No	Name	Connection	Description
A	DC input terminals	PVX+/PVX-	PV connector
B	USB/WIFI port	USB/WIFI/GPRS/ETHERNET	For WIFI,GPRS, Ethernet Communication
C	RS485 Modbus/DRMs	RS485/DRMs	RS485 Communication port/ DRMs port
D	AC output terminals		AC output terminal
E	Grounding	⏚	Connecting terminal of the ground , choose at least one for grounding connection
*F	DC switch lock		For Australian models

*Note: Lock the screw to limit the torque of the DC switch, making it impossible to twist the DC switch from OFF to ON, or ON to OFF.Remove the screw before turning the DC switch from OFF to ON or ON to OFF.

5.3. Connecting PNGD cables (grounding)

Connect the 3PH 250KTL-255KTL-HV inverter to the ground electrode using ground protection cables (PGND).

⚠ Attention	**The inverter does not have a transformer, therefore the positive and negative polarities of the photovoltaic string do NOT need to be grounded. Otherwise, the inverter may fail. All non-current-carrying metal parts (such as the PV module frame, PV rack, housing of the combiner box, and housing of the inverter) in the PV power system must be connected to the ground.**

Prerequisites:

Prepare the grounding cable (recommend 16mm^2 yellow-green outdoor cable and M8 OT Terminal).

Procedure:

1) Remove the insulation layer with an appropriate length using a wire stripper shown in figure below.

Note: L2 is approximately 2-3 mm longer than L1.

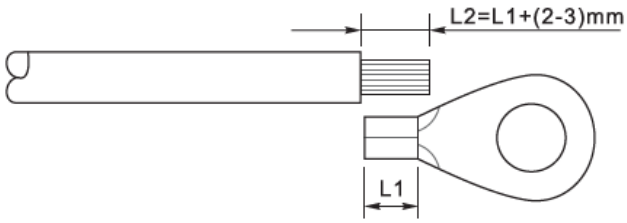

Figure 23 – Preparing the ground cable (1)

2) Insert the exposed core wires in the OT terminal and crimp them using a crimping tool, as shown in figure below. Recommend using OT terminal: OTM6, Cable: ≥6mm^2.

Note 1: L3 is the length between the insulation layer of the ground cable and the crimped part. L4 is the distance between the crimped part and the conductor wires protruding from the crimped part.

Note 2: The cavity formed after the conductor has been crimped must completely wrap the conductor wires. The core of the wire must be in close contact with the terminal.

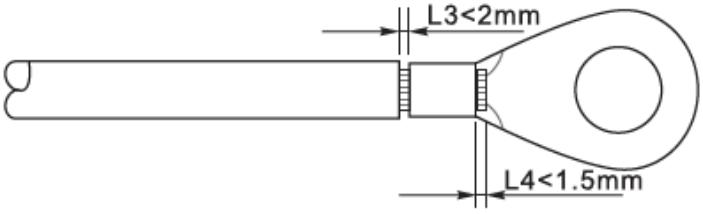

Figure 24 – Preparing the ground cable (2)

3) Remove the screw from the bottom side of inverter (Shown as figure), connect the grounding cable to the grounding point and tighten the grouping screw. Torque is 6-7Nm.

Note: To ensure the anti-corrosion performances of the ground terminals, apply silica gel on them after connecting the ground cable.

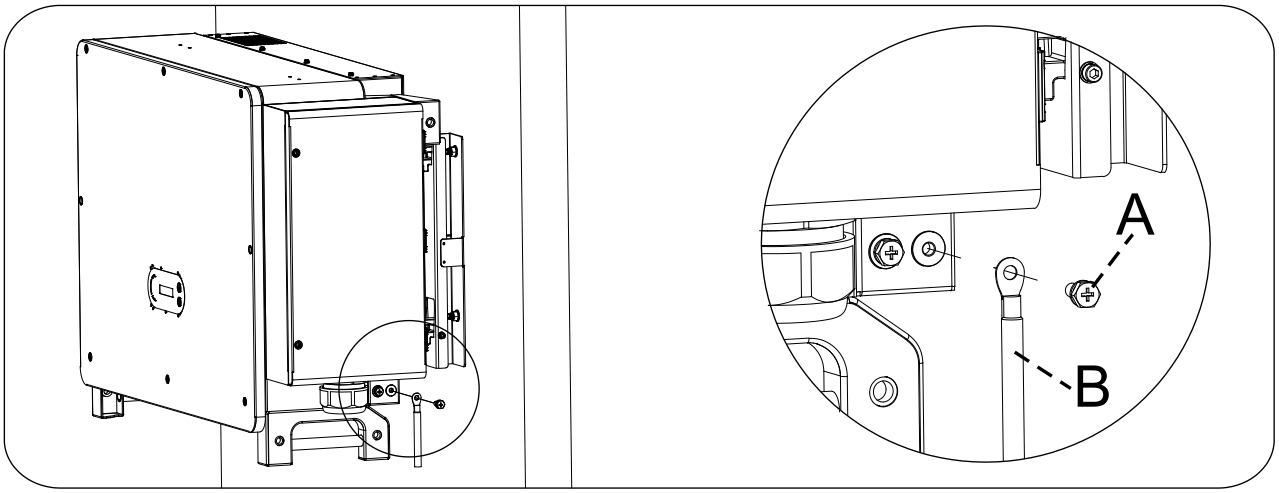

a.M8hexagon screw b. grounding cable

Figure 25 – Inverter external grounding instruction diagram

5.4. Connecting the AC output power cables

Inverter has a standard and integrated residual current monitoring unit (RCMU), when inverter detected leakage current excess 300mA, it will cut off with utility grid for protection. For external Residual Current Device (RCD), the rated residual current shall be 300mA or higher.

Precondition:

Inverter AC side should connect a three phase circuit current to ensure inverter can be cut off with utility grid for abnormal condition.
The AC cable need to meet the requirement of local grid operator.

Cable connection procedure

Open the wiring box.

- Use M6 driver to unscrew the two screws on the wiring box.
- Open wiring box cover.

Note:

- Forbid to open then main board cover of inverter.
- Before open the wiring box, please ensure there is not DC and AC connection.
- If open the wiring box on snowing or raining day, please take protective measures to avoid the snow and rain enter wiring box. Otherwise, should not open the wiring box.
- Please do not unused screw in the wiring box.

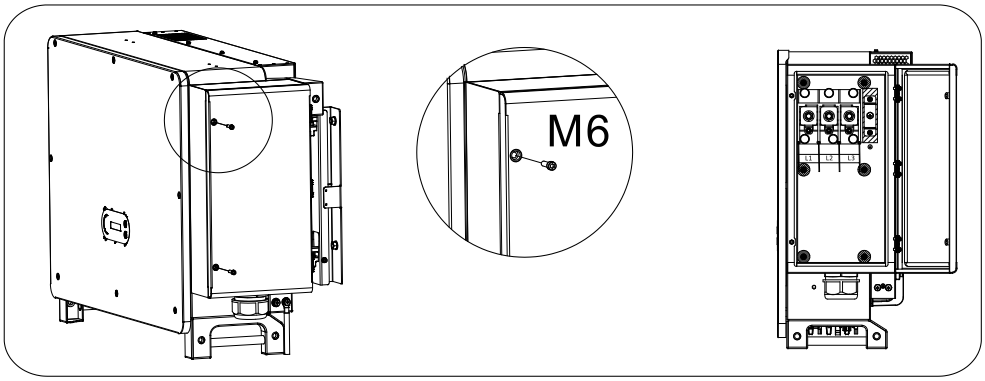

Figure 26- Open wiring box

Wiring Terminal and Precautions

Note:

- Before connect to grid, please ensure the grid voltage and frequency of local grid meet the requirement of inverter , any question please seek local grid company for help.
- Inverter can only connect to grid after get the permission from local grid company
- Should not connect any loads between inverter and AC circuit breaker
- OT/DT Requirement ：
- When use copper core cable, please use copper terminal connector
- When use copper clad aluminum cable, please use copper terminal connector
- When use aluminum core cable, please use Copper and aluminum transition terminal connector or aluminum terminal connector
- If an aluminum alloy cable is used, use copper-aluminum transition wiring terminals, or aluminum wiring terminals along with copper-aluminum transition spacers.

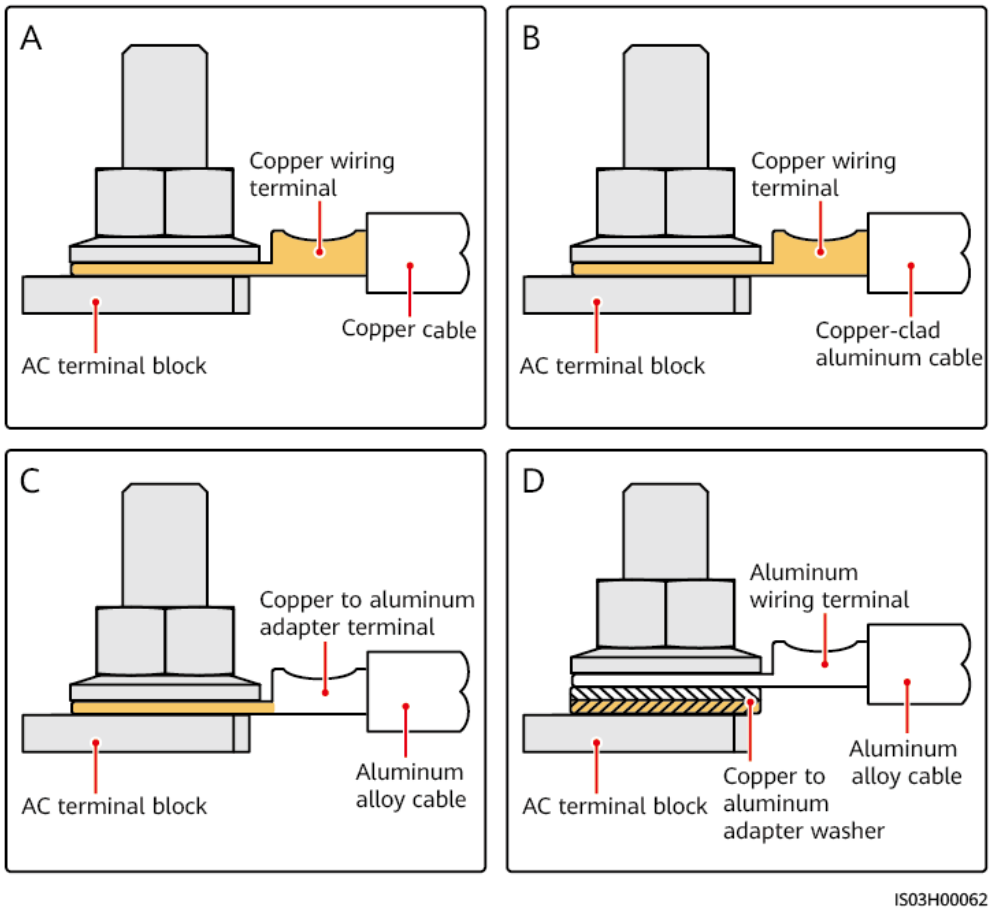

Figure 27- OT/DT Requirement for terminal connection

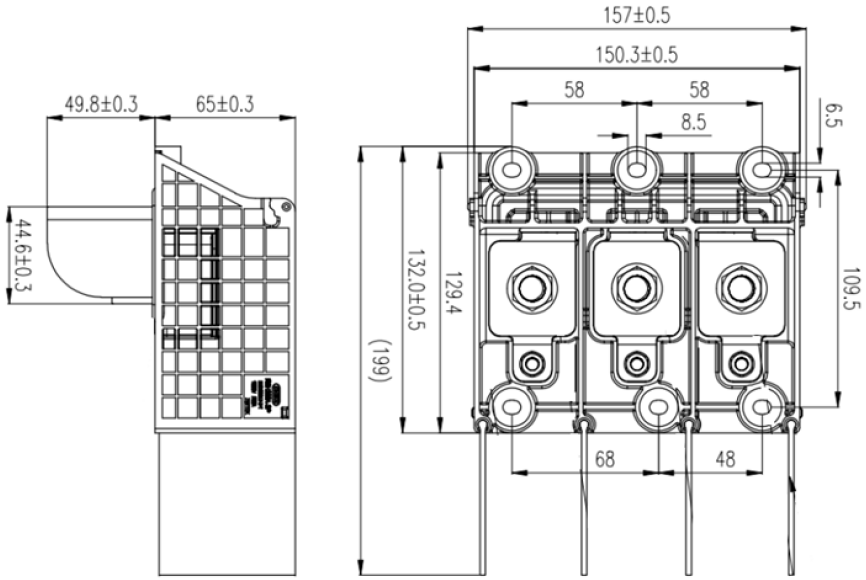

Figure 28 - AC Terminal size

Wring Procedure

The section will use a five core wire as a sample, four core wire has same connection process.
The table below presents recommend AC cable size.

Name	Type	Area(mm^2)
AC Cables	Recommended: Outdoor four-core/five-core copper or aluminum wire	Copper Wire: 95~185; Aluminum Wire: 120~240; PE Wire: reference 5.3

1) Open the cover.
2) Turn OFF the AC circuit breaker and secure against reconnection.
3) Unscrew the nut of the AC terminal block and select the sealing ring according to the outer diameter of the cable. Insert the nut, sealing ring into the cable in sequence.
4) Remove the insulation layer of an appropriate length according to figure below.

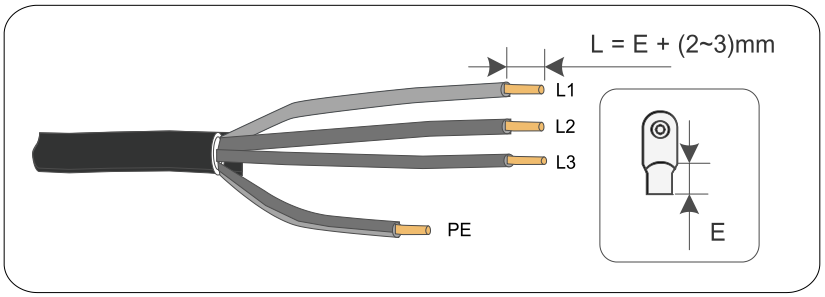

5) Crimp the Terminal.

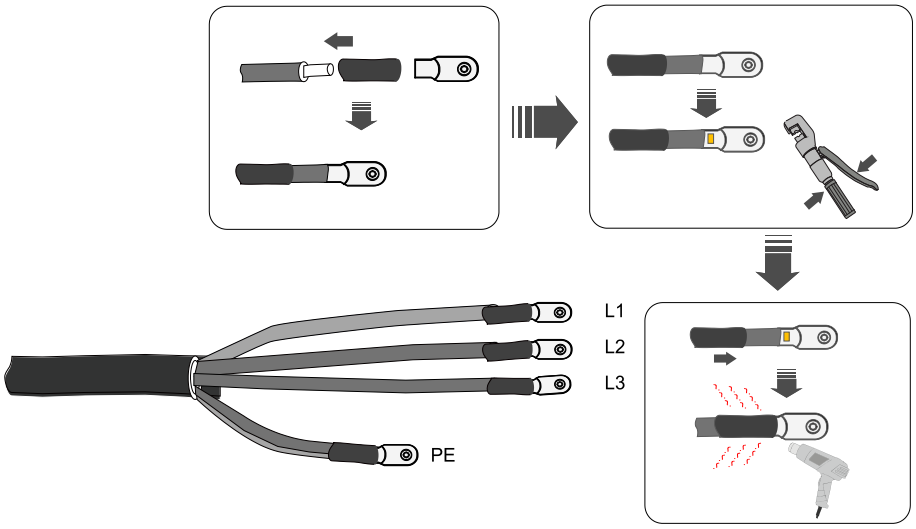

6) Depending on the grid configuration, connect L1, L2, L3 and N to the terminals according to the label and tighten the screw on the terminal using a screwdriver.

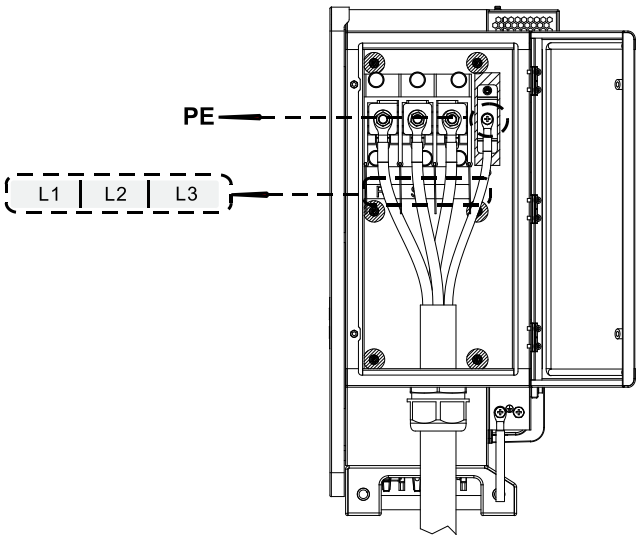

Note:

- Phase lines use M12 terminal connector, PE line use M8 terminal connector.

5.5. Connect the power cord of the tracking system (optional)

be careful:

- Between the inverter and the tracking control box, it is necessary to connect the protection disconnector fuse group or fuse disconnector. Specification: voltage ≥ 800V, current 16a, protection type GM.
- The cable length between the power line terminal and the disconnector fuse group or fuse disconnector shall be ≤ 2.5m.
- The power line of the tracking system must be connected before the AC output line, otherwise it will cause rework.
- The tracking power cord needs to be provided by the user, and the manufacturer does not provide the power cord.

Recommended power cord specifications:

Area(mm^2)	Cable outer diameter(mm)
4.0~6.0	15~18

Step 1: use wire strippers to strip the insulation layer of the tracking power line to an appropriate length, as shown in the following figure.
Step 2: thread the wire core stripped of the insulation layer into the conductor crimping area of the OT terminal and press it tightly with a crimping pliers.
Step 3: thread the fabricated cable into the waterproof joint;
Step 4: connect the cable with the corresponding terminal, tighten the nut and fix the terminal.

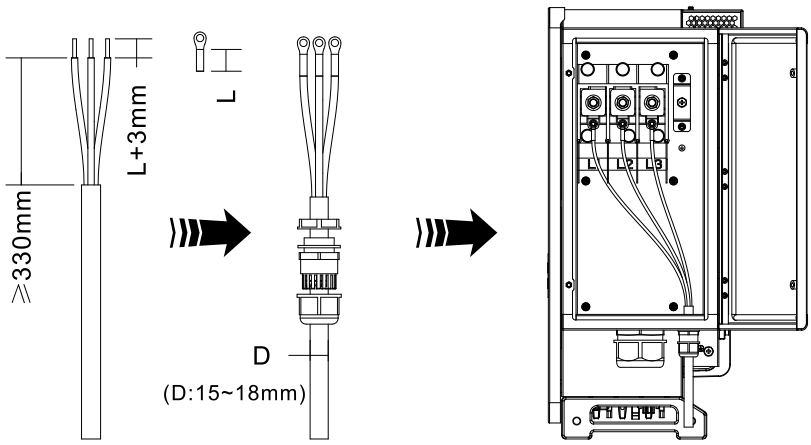

5.6. Connecting the DC input power cables

Connect the 3PH 250KTL-255KTL-HV inverter to the photovoltaic strings using DC input power cables. Select the input mode: the 3PH 250KTL-255KTL-HV inverter has 8-12 MPPTs, which can be set independently or in parallel, depending on how the system was designed. The user can choose the appropriate MPPT operating mode.

Independent mode (default):

If the strings are independent (e.g. installed on two separate flaps), the input model must be set to "independent mode."

Parallel mode:

If the strings are connected in parallel, the input mode must be set to "parallel mode."

Note:

- Connecting PV strings into inverter must following the below procedure. Otherwise, any faulty cause by inappropriate operation will be including in the warranty case.
- Ensure the maximum short circuit current of PV strings should less than the maximum inverter DC current input.And three "DC switch" is in OFF position. Otherwise, it may cause high voltage and electric shock.
- Ensure PV array have good insulation condition in any time.
- Ensure same PV string should have the same structure, including: same model, same number of panels, same direction, same azimuth.
- Ensure PV positive connector connect to inverter positive pole, negative conenctor connect to inverter negative pole
- Please use the connectors in the accessories bag. The damage cause by incorrect is not including in the warranty.

Context

Cross section (mm² / AWG)		Outer diameter of cable (mm)
Range	Recommended value	
4.0-6.0 / 11-9	4.0 / 11	4. 5 - 7. 8

Figure 29 - Recommend DC cable size

1) Find the metal contact pins in the accessories bag, connect the cable according below figure (1.Positive cable, 2. negative cable).

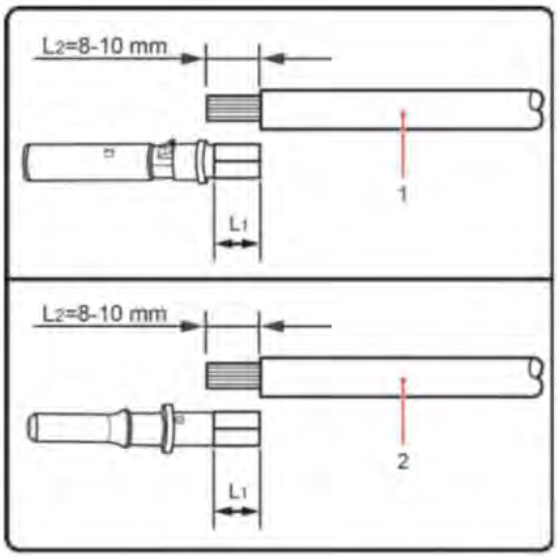

Figure 30 – DC cable connection

2) Crimp the PV metal contact pin to the striped cable using a proper crimping pliers.

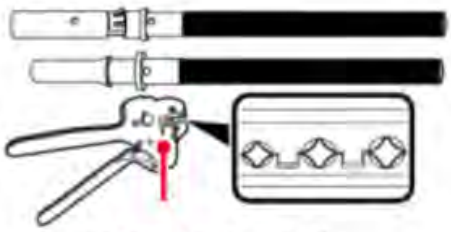

3) Insert wire into the connector cap nut and assemble into the back of male or female plug, When you heard a “click”, the pin tact assembly is seated correctly. (3. Positive Connector, 4. negative connector).

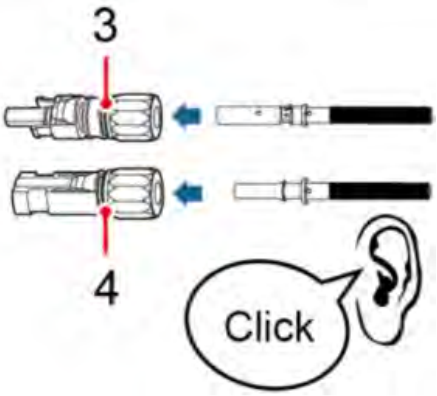

4) Measure PV voltage of DC input with multimeter, verify DC input cable polar and connect DC connector with inverter until hearing a slight sound indicated connection succeed.

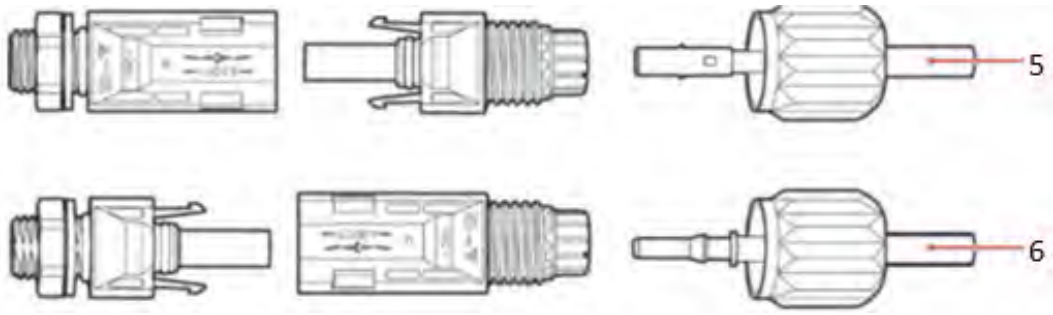

Figure 31 - DC cable connection

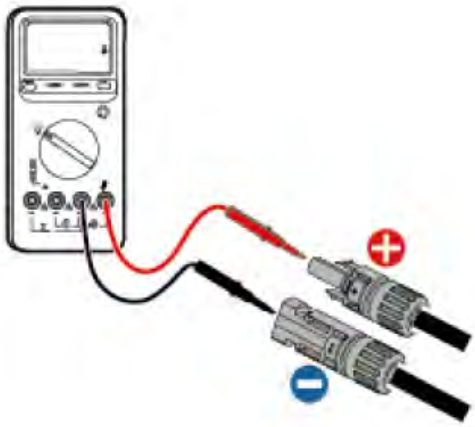

Note: Please use multimeter to make sure the PV array positive pole and negative pole!

Dealing : If need to remove the PV connector from inverter side, please use the Removal Tool as below diagram, move the connector gently.

Removal procedure

To remove the positive and negative connectors from the inverter, insert a removal tool in the bayonet coupling and press the tool with adequate force, as shown in the figure below.

⚠ Warning	**Before removing the positive and negative connectors, make sure that the inverter's circuit breaker is switched off. If not, the direct current may cause an electric arc that could result in a fire**

Figure 32 – Removing the DC connector

5.7. Connecting the communication cables

Note:

When layout the wiring diagram, please separate the communication wiring and power wiring in case the signal be affected.

USB/Wifi Port

Port Description：

USB/WIFI port	USB: USB PORT	Use for updating the software
	WIFI: WIFI/GPRS/ETHERNET PORT	Use for connect WiFi/GPRS/Ethernet for data transmission

Procedure:

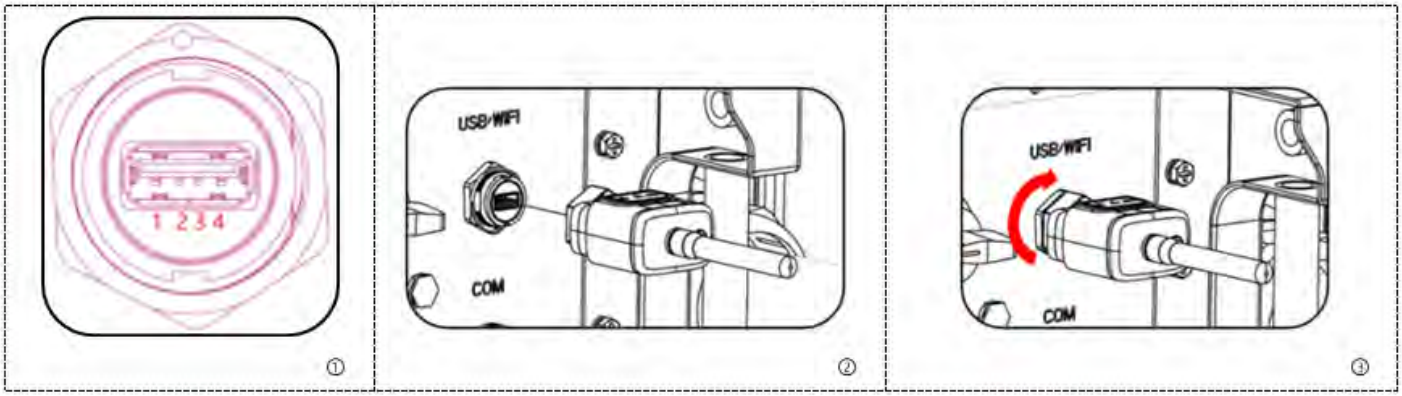

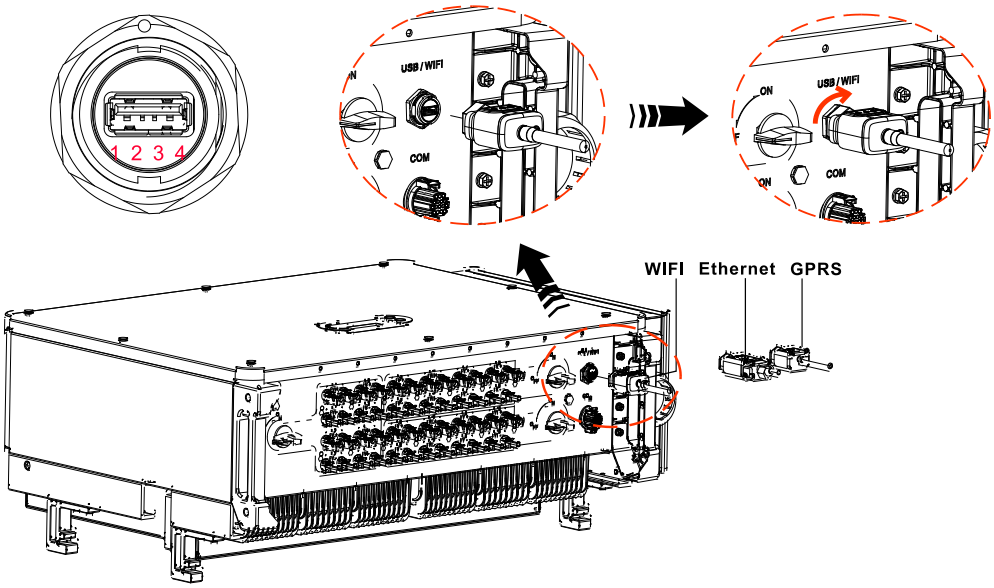

WIFI/GPRS/Ethernet

By the USB acquisition stick (WIFI/GPRS/Ethernet), transfer the inverter power output information, alarm information, operation state to the PC terminal or local data acquisition device, then uploaded to the server. Register remote monitoring of AZZURRO ZCS 250/255KTL-HV at its relevant website or APP according to monitoring deviceSN.

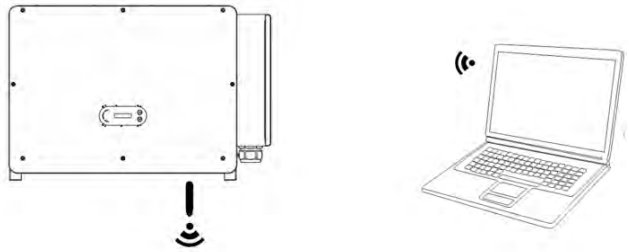

COM-Multi function communication port

The table below presents recommend com cable size.

Name	Type	Outer diameter (mm)	Area (mm^2)
RS485 Communication Wire	Outdoor shielded twisted pair meets local standards	3 core: 4~8	0.25~1

Port Description：

PIN	Define	Function	Note
1	RS485A	RS485 signal+	Wire connection monitoring or multiple inverter monitoring
2	RS485A	RS485 signal+	
3	RS485B	RS485 signal-	
4	RS485B	RS485 signal-	
5	Electric meter RS485A	Electric meter RS485 signal+	Wire connection Electric meter
6	Electric meter RS485B	Electric meter RS485 signal-	
7	GND.S	RS485 signal ground	
8	DRM0	Remote shunt down	DRMS port
9	DRM1/5		
10	DRM2/6		
11	DRM3/7		
12	DRM4/8		
13	GND.S	Communication Ground	
14-16	Blank PIN	N/A	N/A

Procedure:

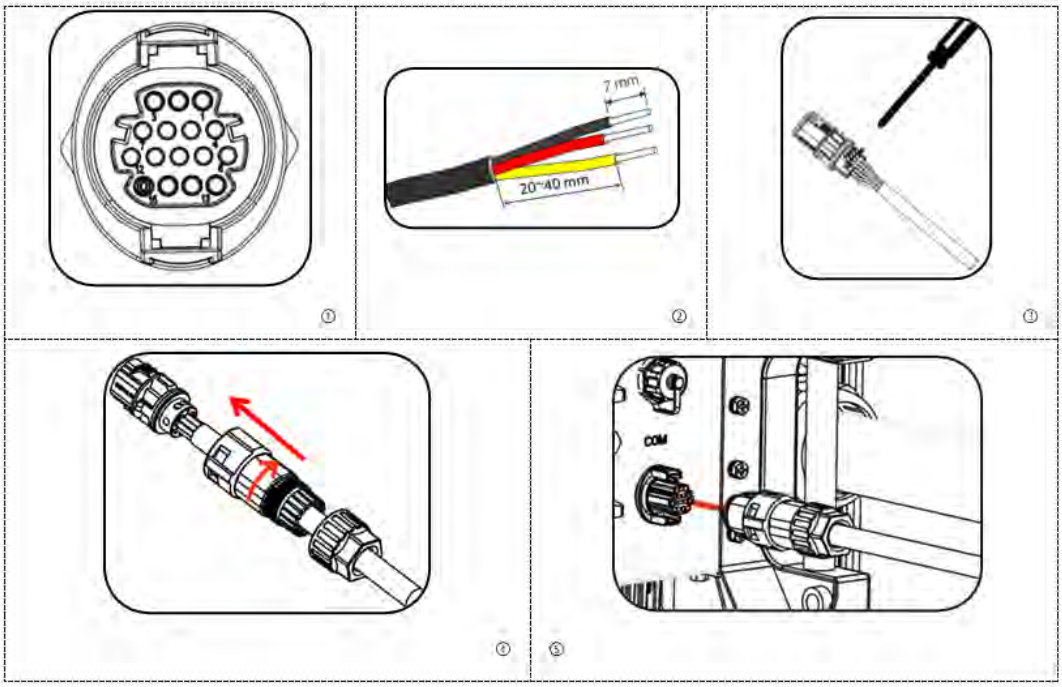

Procedure：(Corresponding to the second communication terminal)

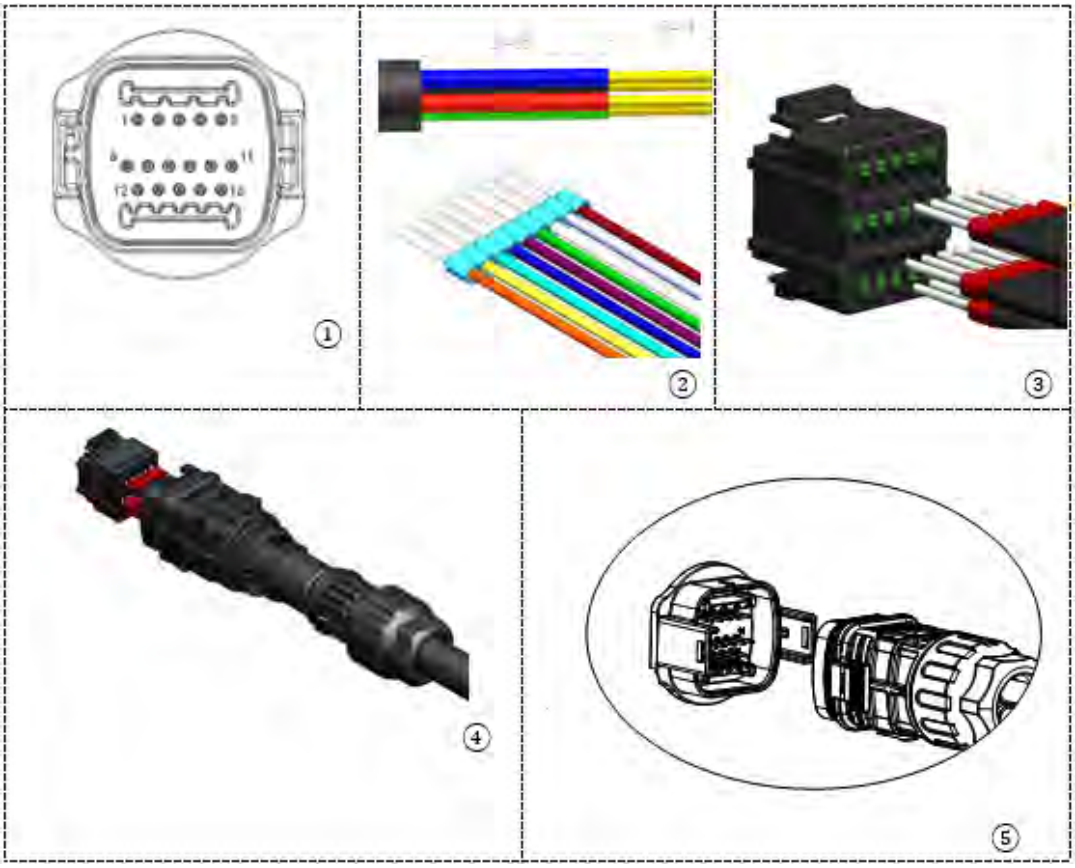

Communications Port Description

Logic interface

Logic interface for AS/NZS 4777.2:2020, also known as inverter demand response modes (DRMs).

The inverter will detect and initiate a response to all supported demand response commands within 2 s. The inverter will continue to respond while the mode remains asserted.

Pin NO.	Function
9	DRM1/5
10	DRM2/6
11	DRM3/7
12	DRM4/8
13	GND
8	DRM0

Function description of the DRMs terminal

NOTE: Supported DRM command: DRM0, DRM5, DRM6, DRM7, DRM8.

Logic interface for VDE-AR-N 4105:2018-11, is in order to control and/or limit the inverter's output power. The inverter can be connected to a RRCR (Radio Ripple Control Receiver) in order to dynamically limit the output power of all the inverters in the installation.

Pin NO.	Pin name	Description	Connected to (RRCR)
9	L1	Relay contact 1 input	K1 - Relay 1 output
10	L2	Relay contact 2 input	K2 - Relay 2 output
11	L3	Relay contact 3 input	K3 - Relay 3 output
12	L4	Relay contact 4 input	K4 - Relay 4 output
13	G	GND	Relays common node

Table 4-5 The inverter is preconfigured to the following RRCR power levels

Relay status: close is 1, open is 0

L1	L2	L3	L4	Active Power	cos(ϕ)
1	0	0	0	0%	1
0	1	0	0	30%	1
0	0	1	0	60%	1
0	0	0	1	100%	1

Logic interface forEN50549-1:2019 and VDE-AR-N 4105:2018-11, is in order to cease active power output within five seconds following an instruction being received at the input interface.

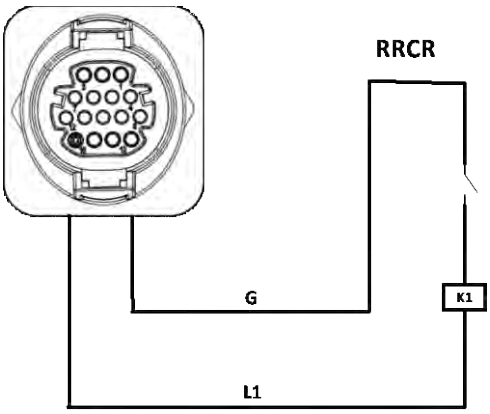

Inverter – RRCR Connection

Pin NO.	Pin name	Description	Connected to (RRCR)
9	L1	Relay contact 1 input	K1 - Relay 1 output
13	G	GND	K1 - Relay 1 output

Function description of the terminal

Relay status: close is 1, open is 0

L1	Active Power	Power drop rate	Cos(φ)
1	0%	<5 seconds	1
0	100%	/	1

The inverter is preconfigured to the following RRCR power levels.

RS485

By RS485 interface, transfer the inverter power output information, alarm information, operation state to the PC terminal or local data acquisition device, then uploaded to the server.

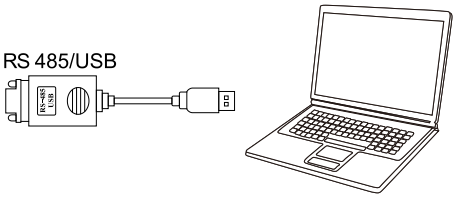

Picture of the RS485/USB converter and PC terminal

If only one ZCS AZZURRO 250/255KTL-HV is used, use a communication cable, refer to section for COM pin definition, and choose either of the two RS485 ports.

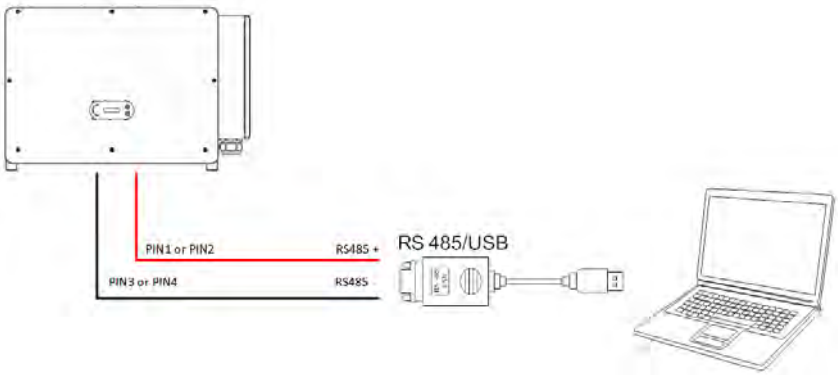

Single ZCS AZZURRO 250/255KTL-HV connecting communications

Note	• **The length of the RS485 communication cable should be less than 1000 m.** • **The length of the WIFI communication cable should be less than 100 m.**

PLC（Multi inverter monitoring system）

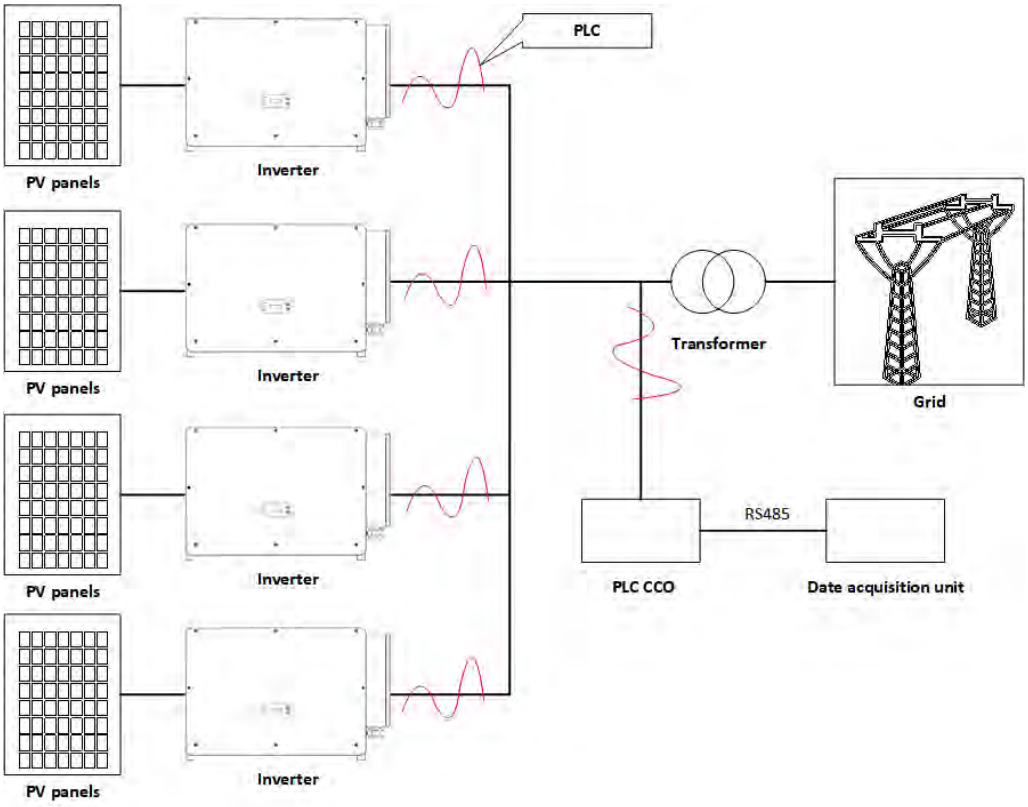

Figure 5-16Multi inverter monitoring system

6. Commissioning the inverter

6.1. Safety inspection before commissioning

Attention	**Make sure that the DC and AC voltages fall within the range permitted by the inverter.**

- **Photovoltaic strings**
  Before turning on the inverter, it is necessary to examine the photovoltaic string. Check the open-circuit voltage of each photovoltaic panel and compare it with the data in the technical datasheet.
  - Make sure that the open-circuit voltage of each PV string corresponds to the technical data;
  - Make sure that the positive and negative polarities are correct.

- **DC Connection**
  Make sure that the DC switch of the inverter is off. Use the multi-meter to check the voltage and current on the DC side; check the DC cable, make sure that the positive and negative poles are not inverted, and are consistent with the positive and negative poles of the photovoltaic string; otherwise, the inverter may suffer irreparable damage. Compare the voltage of each string connected to the same MPPT; if the difference is more than 3%, the PV string may be damaged. The maximum DC voltage (if the minimum operating temperature allowable is reached) should be less than 1100 V. Make sure that all the photovoltaic strings are securely connected to the input of the inverter.

- **AC Connection**
  Make sure that the AC switch of the inverter is off. Check that the phases of the inverter are correctly connected to the grid (R, S, T, N, PE). Check that the type of AC grid in which the inverter is installed is correct (TN-C, TN-S, TT). Check that the voltage of each phase is within the correct range. If possible, measure the THD; if there is too much distortion, the inverter may not operate properly.

- **Installing the front cover and the clamping screws**

6.2. Starting the inverter

1) Turn ON the DC switch both on the field panel and on the photovoltaic inverter (if present); wait for the screen to turn on.

2) Turn ON the AC switch installed on the wall.
   When the photovoltaic string generates enough direct current, the inverter will start automatically. The word "normal" shown on the screen indicates the correct functioning of the inverter.

3) Set the correct country code.

Note: Different grid operators in different countries require different specifications regarding the grid connections of PV inverters. Therefore, it is very important to select the correct country code according to the requirements of the local authorities.

If in doubt, consult the system engineer or a qualified electrician.

Zucchetti Centro Sistemi S.p.A. shall not be held responsible for any consequences resulting from the incorrect selection of the country code.

If the inverter indicates the presence of any faults, refer to related chapter of this manual or contact the Zucchetti Centro Sistemi S.p.A. technical support.

7. Operating interface

General information in this chapter

This section describes the display and its operation, as well as the buttons and LED indicators of the 3PH 250KTL-255KTL inverters.

7.1. Operating panel and display

Buttons and LED indicators

Figure 33 - LCD display with buttons and LED indicators

Main buttons:

"∧" Short press UP button = go up
"∧" Long press UP button = exit current interface
"∨" Short press DOWN button = go down
"∨" Long press DOWN button = enter current interface

Indicator lights:

- "GFI" Red light ON = GFCI faulty.
- "Normal" Green light flashing = counting down or checking.
- "Normal" Green light ON = Normal.
- "Alarm" Red light ON= recoverable or unrecoverable faulty.

7.2. Main interface

LCD interface indicated inverter status, alarm information, communication connection, PV input current and voltage, grid voltage,current and frequency, today generation, total generation.

Inverter working status, PV 1 -12 PV input voltage and current.

Inverter working status, PV generated power.

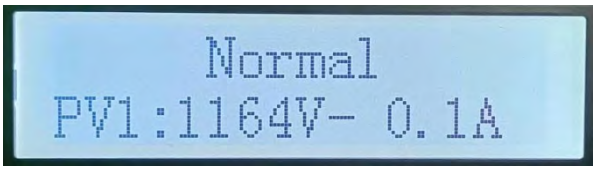

Inverter working status, today generated electricity.

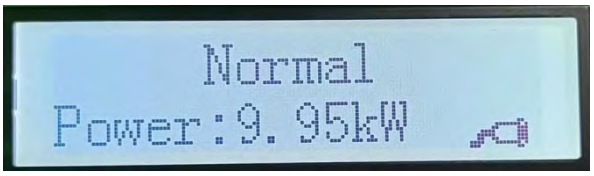

Inverter working status, total generated electricity.

Inverter working status, grid voltage and current.

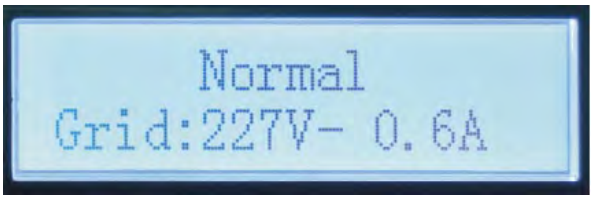

Inverter working status, grid voltage and frequency.

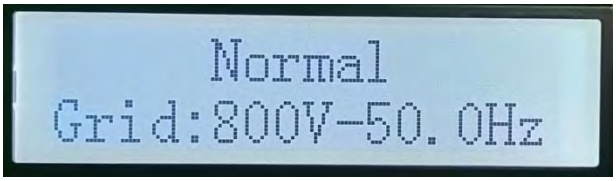

Inverter working status, Wi-Fi/ RS485 status.

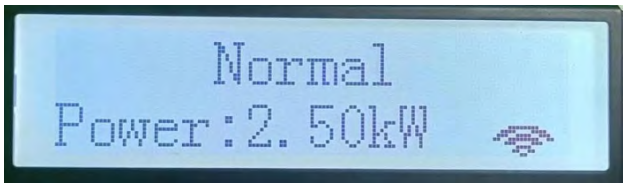

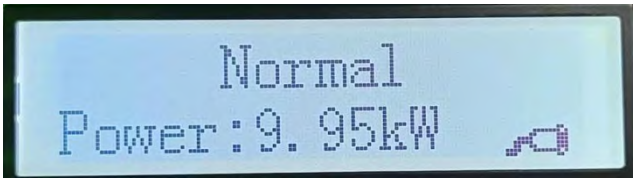

Inverter faulty alarm.

When power turn on, LCD interface displays INITIALIZING, refer below picture.

When control board successfully connected with communication board, the LCD display the current state of the inverter, display as shown in the figure below.

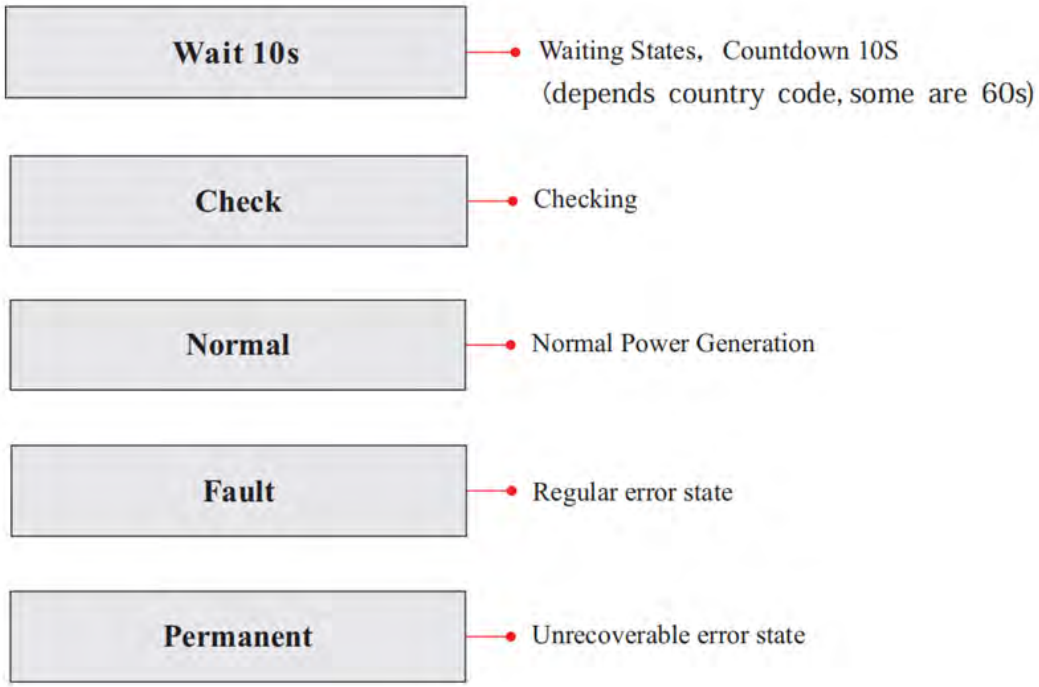

Inverter states includes: wait, check, normal, fault and permanent

Wait: Inverter is waiting to Check State when reconnect the system. In this state, grid voltage value is between the max and min limits and so on; If not, inverter will go to Fault State or Permanent State.

Check: Inverter is checking isolation resistor, relays, and other safety requirements. It also does self-test to ensure inverter software and hardware are well functional. Inverter will go to Fault State or Permanent State if any error or fault occurs.

Normal: Inverter enter to Normal State, it is feeding power to the grid; inverter will go to Fault State or Permanent state if any error or fault occurs.

Fault: Fault State: Inverter has encountered recoverable error. It should recover if the errors disappear. If Fault State continues; please check the inverter according error code.

Permanent: Inverter has encountered unrecoverable error, we need maintainer debug this kind of error according to error code.
When the control board and communication board connection fails, the LCD display interface as shown in the figure below.

7.3. Main menu

Long press the down button under standard interface to enter into main interface, Main interface including below information:

Normal	---------Long press DOWN button
	1.Enter Setting
	2.Event List
	3.SystemInfo
	4.Display Time
	5.Software Update

(A) Enter setting Interface as below

The “Settings” menu contains the following sub-menu:

1.Enter Setting	--------Long press DOWN button	
	1.Set time	**11.Logic Interface**
	2.Clear Energy	**12.IV Curve Scan**
	3.Clear Events	**13.PID**
	4.Country Code	
	5.On-Off Control	
	6.Set Energy	
	7.Set Address	
	8.Set Input mode	
	9.Set Language	
	10.Set RefluxP	

Long press the button to Enter the main interface of "1.Enter Setting" and long press to enter the setting menu. You can select the content you want to set by short pressing the button.

Note1: Some settings need to enter the password (the default password is 0001), when entering the password, short press to change the number, long press to confirm the current number, and long press after entering the correct password. If "password error, try again" appears, you will need to re-enter the correct password.

- **Set Time**

Set the system time for the inverter.

- **Clear Energy**

Clean the inverter of the total power generation.

- **Clear Events**

Clean up the historical events recorded in the inverter.

- **Country Code**

Long press button, enter interface, save the specific file into USB and insert USB into inverter communication port.

- **On-Off Control**

Inverter on-off local control.

- **Set Energy**

Set the total power generation. You can modify the total power generation through this option.

- **Set address**

Set the address (when you need to monitor multiple inverters simultaneously), Default 01.

- **Set Input mode**

Azzurro 3PH 250KTL-255KTL-HV has 8-12 MPPT, these MPPTs can work interdependently, or divided into parallel mode. User can change the setting according to the configuration.

- **Set Language**

Set the inverter display language.

- **Set RefluxP**

The refluxpower value set by the anti-reflux function is the maximum power value allowed to be transmitted to the grid.

- **Logic interface**

Enable or disable logical interfaces. It is use for below standard Australia (AS4777), Europe General (50549), German(4105)

- **MPPT Scan**

Shadow scanning, when the component is blocked or abnormal, causing multiple power peaks, by enabling this function, the peak point of maximum power can be tracked.

- **PID**

Enable or disable PID function. When the PID module is enabled(enter the default password: 0001),it will work between 0 a.m. and 4 a.m

(B) Event list

Event List is used to display the real-time event records, including the total number of events and each specific ID No. and happening time. User can enter Event List interface through main interface to check details of real-time event records, Event will be listed by the happening time, and recent events will be listed in the front. Please refer to below picture. Long press the button and short press the button to turn the page in standard interface, then enter into "2.Event List" interface.

2. Event List	
1. Current event	**2. History event**
Fault information	001 ID04 06150825 (Display the event sequence number, event ID number, and event occurrence time)

(C) "SystemInfo" Interface as below

3.SystemInfo	------Long press DOWN button

1.Inverter Type	
2.Serial Number	
3.Soft Version	
4.Hard Version	
5.Country	
6.Modbus Address	
7.Input Mode	

8.Remote State	
9.Reflux Power	
10.DRMs0	
11.DRMn	
12.MPPT Scan	

The user enters the main menu by long pressing the DOWN button, short press and turns the page to select menu contents, then long press the button to enter "3. SystemInfo". Turning the page down can select the system information to view.

(D) Display Time

Long press the button and short press the button to turn the page in the standard user interface to enter into “4.Display Time”,then long press the button to display the current system time.

(E) Software Update

User can update software by USB flash drive , Zucchetti Centro Sistemi S.p.A. will provide the new update software called firmware for userif it is necessary,The user needs to copy the upgrade file to the USB flash drive.

7.4. Updating Inverter Software

AZZURRO 3PH 250KTL-255KTL-HV inverter offer software upgrade via USB flash drive to maximize inverter performance and avoid inverter operation error caused by software bugs.

1) Turn off AC circuit breaker and DC switch, remove the communication board cover as below figure. If the RS485 line has been connected, please release the waterproof nut first and make sure the communication line is no longer the force. Then remove the waterproof cover.

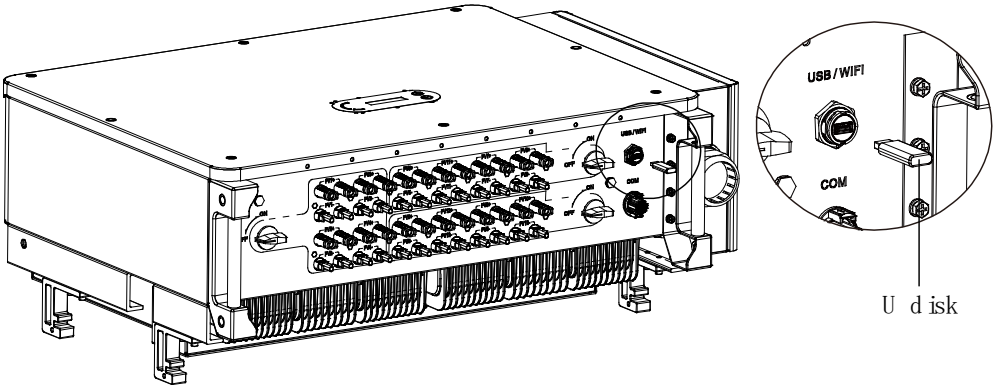

Figure 34 - Remove communication broad cover

2) Insert USB into computer.

3) Zucchetti Centro Sistemi S.p.A. service team will send the software code to user, After user receive the file, please decompressing file and cover the original file in USB flash drive.

4) Insert USB drive into the USB port of inverter.

5) Then turn on DC switch and enter into the online upgrade to the main menu"5.Software Update"in the LCD display program. The method to enter the menu can refer to operation interface of LCD.

6) Input the password 0715 and then begin the update process.

7) System update main DSP, slave DSP and ARM in turns. If main DSP update success, the LCD will display "Update DSP1 Success", otherwise display "Update DSP1 Fail". If slave DSP update success, the LCD will display "Update DSP2 Success", otherwise display "UpdateDSP2 Fail".

8) If Fail, please turn off the DC switch, wait for the LCD screen turn off, then turn on the DC switch again, then continue to update from step 5.

9) After the update is completed, turn off the DC breaker, wait for the LCD screen extinguish, then recover the communication waterproof and then turn on the DC breaker and AC breaker again, the inverter will enters the running state. User can check the current software version in SystemInfo→3.SoftVersion.

8. Troubleshooting and maintenance

8.1. Troubleshooting

This section describes the potential errors for this product. Please read carefully for the following tips when doing the troubleshooting:

1) Check the warning message or faulty codes on the inverter information panel.

2) If not any error code display on the panel, please check the following lists:

- Is inverter be installed in a clean, dry, ventilated environment?
- Is the DC switch turn off?
- Are the cable cross section area and length meet the requirement?
- Are the input and output connection and wiring in good condition?
- Are the configuration settings correctly for the particular installation?

This section contains the potential errors, resolution steps, and provide users with troubleshooting methods and tips.
The process to check the event list can refers to Manual.

COde	Name	Description	Solution
ID001	GridOVP	The grid voltage is too high	If the alarm occurs occasionally, the possible cause is that the electric grid is abnormal occasionally. Inverter will automatically return to normal operating status when the electric grid's back to normal. If the alarm occurs frequently, check whether the grid voltage/frequency is within the acceptable range. If yes, please check the AC circuit breaker and AC wiring of the inverter. If the grid voltage/frequency is NOT within the acceptable range and AC wiring is correct, but the alarm occurs repeatedly, contact technical support to change the grid over-voltage, under-voltage, over-frequency, under-frequency protection points after obtaining approval from the local electrical grid operator.
ID002	GridUVP	The grid voltage is too low	
ID003	GridOFP	The grid frequency is too high	
ID004	GridUFP	The grid frequency is too low	
ID005	GFCI	Charge Leakage Fault	Check for inverter and wiring.
ID006	OVRT fault	OVRT function is faulty	If the alarm occurs occasionally, the possible cause is that the electric grid is abnormal occasionally. Inverter will automatically return to normal operating status when the
ID007	LVRT fault	LVRT function is faulty	

ID008	IslandFault	Island protection error	electric grid's back to normal. If the alarm occurs frequently, check whether the grid voltage/frequency is within the acceptable range. If yes, please check the AC circuit breaker and AC wiring of the inverter. If the grid voltage/frequency is NOT within the acceptable range and AC wiring is correct, but the alarm occurs repeatedly, contact technical support to change the grid over-voltage, under-voltage, over-frequency, under-frequency protection points after obtaining approval from the local electrical grid operator.
ID009	GridOVPInstant1	Transient overvoltage of grid voltage 1	
ID010	GridOVPInstant2	Transient overvoltage of grid voltage 2	
ID011	VGridLineFault	Power grid line voltage error	
ID013	RefluxFault	Anti-Reflux function is faulty	
ID017	HwADFaultIGrid	Power grid current sampling error	
ID018	HwADFaultDCI	Wrong sampling of dc component of grid current	
ID019	HwADFaultVGrid(DC)	Power grid voltage sampling error (DC)	
ID020	HwADFaultVGrid(AC)	Power grid voltage sampling error (AC)	
ID021	GFCIDeviceFault(DC)	Leakage current sampling error(DC)	
ID022	GFCIDeviceFault(AC)	Leakage current sampling error(AC)	
ID024	HwADFaultIdc	Dc input current sampling error	
ID026	HwADErrIdcBranch	\	
ID029	ConsistentFault_GFCI	Leakage current consistency error	
ID030	ConsistentFault_Vgrid	Grid voltage consistency error	
ID031	ConsistentDCI	DCI consistency error	
ID033	SpiCommFault(DC)	SPI communication error (DC)	
ID034	SpiCommFault(AC)	SPI communication error (AC)	
ID035	SChip_Fault	Chip error (DC)	
ID036	MChip_Fault	Chip error (AC)	
ID041	RelayFail	Relay detection failure	
ID042	IsoFault	Low insulation impedance	Check the insulation resistance between the photovoltaic array and ground (ground), if there is a short circuit, the fault should be repaired in time.
ID043	PEConnectFault	Ground fault	Check ac output PE wire for grounding.
ID044	ConfigError	Error setting input mode	Check the input mode (parallel/independent mode) Settings for the inverter. If not, change the input mode.
ID050	TempFault_HeatSink1	Radiator1 temperature	

		protection	
ID051	TempFault_HeatSink2	Radiator2 temperature protection	
ID052	TempFault_HeatSin3	Radiator3 temperature protection	
ID053	TempFault_HeatSink4	Radiator4 temperature protection	
ID054	TempFault_HeatSin5	Radiator5 temperature protection	
ID055	TempFault_HeatSin6	Radiator6 temperature protection	
ID057	TempFault_Env1	Ambient temperature 1 protection	
ID058	TempFault_Env2	Ambient temperature 2 protection	
ID059	TempFault_Inv1	Module 1 temperature protection	
ID060	TempFault_Inv2	Module 2 temperature protection	
ID061	TempFault_Inv3	Module 3 temperature protection	
ID065	VbusRmsUnbalance	Unbalanced bus voltage RMS	Internal faults of inverter, switch OFF inverter, wait for 5 minutes, then switch ON inverter. Check whether the problem is solved. If no, please contact technical support.
ID066	VbusInstantUnbalance	The transient value of bus voltage is unbalanced	
ID067	BusUVP	Busbar undervoltage during grid-connection	
ID068	BusZVP	Bus voltage low	
ID069	PVOVP	PV over-voltage	Check whether the PV series voltage (Voc) is higher than the maximum input voltage of the inverter. If so, adjust the number of PV modules in series and reduce the PV series voltage to fit the input voltage range of the inverter. After correction, the inverter will automatically return to its normal state.
ID072	SwBusRmsOVP	Inverter bus voltage RMS software overvoltage	
ID073	SwBusInstantOVP	Inverter bus voltage instantaneous value software overvoltage	
ID074	FlyingCapOVP		
ID075	FlyingCapUVP		

ID082	DciOCP	Dci overcurrent protection	
ID083	SwOCPInstant	Output instantaneous current protection	
ID085	SwAcRmsOCP	Output effective value current protection	
ID086	SwPvOCPInstant	PV overcurrent software protection	
ID098	HwBusOVP	Inverter bus hardware overvoltage	
ID102	HwPVOCP	PV hardware overflows	
ID103	HwACOCP	Ac output hardware overflows	
ID105	MeterCommFault	Meters communication fault	Check whether the meters wiring is correct.
ID110	Overload1	Overload protection 1	Please check whether the inverter is operating under overload.
ID113	OverTempDerating	Internal temperature is too high.	Make sure the inverter is installed where there is no direct sunlight. Please ensure that the inverter is installed in a cool/well ventilated place. Ensure the inverter is installed vertically and the ambient temperature is below the inverter temperature limit.
ID114	FreqDerating	AC frequency is too high	Please make sure the grid frequency and voltage is within the acceptable range.
ID115	FreqLoading	AC frequency is too low	
ID116	VoltDerating	AC voltage is too high	
ID117	VoltLoading	AC voltage is too low	
ID129	unrecoverHwAcOCP	Output hardware overcurrent permanent failure	Internal faults of inverter, switch OFF inverter, wait for 5 minutes, then switch ON inverter. Check whether the problem is solved. If no, please contact technical support.
ID130	unrecoverBusOVP	Permanent Bus overvoltage failure	
ID131	unrecoverHwBusOVP	Permanent Bus hardware overvoltage failure	
ID134	unrecoverAcOCPInstant	Output transient overcurrent permanent failure	
ID135	unrecoverIacUnbalance	Permanent failure of unbalanced output current	
ID140	unrecoverRelayFail	Permanent relay failure	
ID141	unrecoverVbusUnbalance	Bus voltage unbalanced permanent failure	

ID142	PermSpdFail(DC)	PV surge protection	
ID143	PermSpdFail(AC)	Grid surge protection	
ID145	USBFault	USB fault	Check the USB port of the inverter
ID146	WifiFault	Wifi fault	Check the Wifi port of the inverter
ID147	BluetoothFault	Bluetooth fault	Check the bluetooth connection of the inverter
ID148	RTCFault	RTC clock failure	Internal faults of inverter, switch OFF inverter, wait for 5 minutes, then switch ON inverter. Check whether the problem is solved. If no, please contact technical support.
ID149	CommEEPROMFault	Communication board EEPROM error	
ID150	FlashFault	Communication board FLASH error	
ID152	SafetyVerFault	The software version is inconsistent with the safety version	
ID153	SciCommLose(DC)	SCI communication error (DC)	
ID154	SciCommLose(AC)	SCI communication error (AC)	
ID155	SciCommLose(Fuse)	SCI communication error (Fuse)	
ID156	SoftVerError	Inconsistent software versions	Contact for technical support and software upgrades.
ID161	ForceShutdown	Force shutdown	The inverter is performed a forced shutdown
ID162	RemoteShutdown	Remote shutdown	The inverter is performed a remote shutdown.
ID163	Drms0Shutdown	Drms0 shutdown	The inverter is performed with a Drms0 shutdown.
ID165	RemoteDerating	Remote derating	The inverter is performed for remote load reduction.
ID166	LogicInterfaceDerating	Logic interface derating	The inverter is loaded by the execution logic interface.
ID167	AlarmAntiRefluxing	Anti refluxderating	The inverter is implemented to prevent countercurrent load drop.
ID169	FanFault1	Fan 1 fault	Please check whether the fan 1 of inverter is running normally.
ID170	FanFault2	Fan 2fault	Please check whether the fan 2 of inverter is running normally.
ID171	FanFault3	Fan 3 fault	Please check whether the fan 3 of inverter is running normally.
ID172	FanFault4	Fan 4 fault	Please check whether the fan 4 of inverter is running normally.
ID173	FanFault5	Fan 5 fault	Please check whether the fan 5 of inverter is running normally.
ID174	FanFault6	Fan 6 fault	Please check whether the fan 6 of inverter is running normally.
ID175	FanFault7	Fan 7 fault	Please check whether the fan 7 of inverter is running normally.
ID176	MeterCommLose	Meters communication fault	Check whether the meters wiring is correct.
ID189	AFCICommLose	AFCImodule	

		communication is lost	
ID190	DCArcingAlarm	Dc arc fault	
ID191	PID_Output_Fail	PID function is failed	
ID192	PLC_Com_Fail	PLC communication is lost	

8.2. Maintenance

Inverters generally do not require daily or routine maintenance. In any case, for proper long-term operation of the inverter, make sure that the heatsink for cooling the inverter has enough space to ensure adequate ventilation and that it is not obstructed by dust or other items.

Cleaning the inverter

Use an air compressor, a soft dry cloth or soft-bristled brush to clean the inverter. Do not use water, corrosive chemical substances or aggressive detergents to clean the inverter. Disconnect the AC and DC power to the inverter before performing any cleaning operations.

Cleaning the heatsink

Use an air compressor, a soft dry cloth or soft-bristled brush to clean the heatsink. Do not use water, corrosive chemical substances or aggressive detergents to clean the heatsink. Disconnect the AC and DC power to the inverter before performing any cleaning operations.

8.3. Maintenance

When the inverter is running, the PID function module increases the potential between the negative pole of the photovoltaic array and the ground to a positive value to suppress the PID effect.

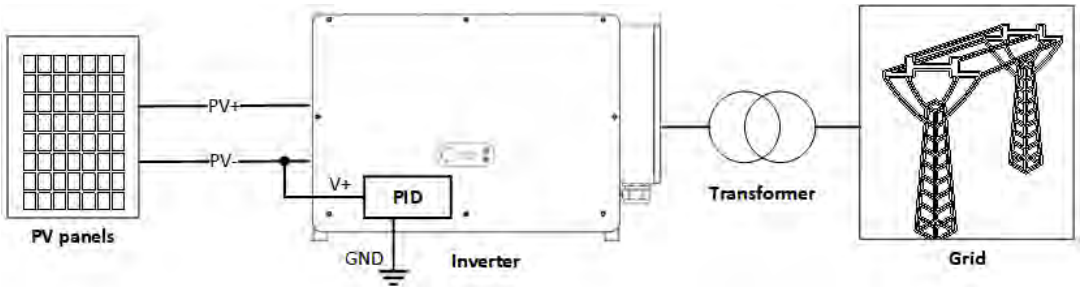

Note

1. Before enabling the PID recovery function, ensure that the polarity of the pv module's ground voltage meets requirements. If in doubt, please contact the pv module manufacturer or read their corresponding user manual.
2. If the voltage scheme of the PID protection/recovery function does not meet the requirements of the corresponding PV module, the PID function cannot work properly or may even damage the PV module.
3. Before enabling the reverse PID function, ensure that the inverter has been applied to the IT system.
4. When the inverter is not running, the PID module will apply reverse voltage to the photovoltaic module to restore the degraded module.
5. If the PID recovery function is enabled, the PID works only at night.
6. After the PID recovery function is enabled, the PV series voltage to ground is 800Vdc by default. You can change the default value through the App.

8.4. SVG

After the SVG is enabled, the inverter can continue to be connected to the grid at night, and can respond to the reactive power scheduling instructions, saving the investment cost of the reactive static compensator.

7. It is necessary to turn on the SVG enable bit when PV is powered. If SVG is enabled at night, the inverter cannot start the grid connection at night. If you have any questions, please contact the photovoltaic module manufacturer or read its corresponding user manual.
8. When the inverter operates in SVG state, the display panel will prompt "SVG state".
9. In SVG state, the maximum reactive power of the inverter is 30% of the maximum apparent power.
10. SVG only works at night. If PV is powered, the inverter will automatically switch to the "grid connected state".

1. Uninstalling

1.1. Uninstallation steps

- Disconnect the inverter from the AC grid by opening the AC circuit breaker.
- Disconnect the inverter from the photovoltaic strings by opening the DC circuit breaker.
- Wait 5 minutes.
- Remove the DC connectors.
- Remove the AC terminals.
- Unscrew the fixing bolt of the bracket and remove the inverter from the wall.

1.2. Packaging

If possible, pack the product in its original packaging.

1.3. Storage

Store the inverter in a dry place where the ambient temperature is between -25 and +60°C.

1.4. Disposal

Zucchetti Centro Sistemi S.p.A. is not liable for the disposal of the equipment, or parts thereof, that does not take place according to the regulations and standards in force in the country of installation.

The symbol of the crossed-out wheeled bin indicates that the equipment, at the end of its useful life, must be disposed of separately from household waste.
This product must be handed over to the waste collection point in your local community for recycling.
For more information, please contact the waste collection authority in your country.
Inappropriate waste disposal could have negative effects on the environment and on human health due to potentially hazardous substances.
With your cooperation in the correct disposal of this product, you contribute to the reuse, recycling and recovery of the product, and to the protection of our environment.

2. Technical data

2.1. Technical data 250KTL-255KTL-HV

TECHNICALDATA	3PH 250KTL-HV	3PH 255KTL-HV
DC Input data		
Typical DC power*	306000W	
Maximum DC power for each MPPT	24000W (500V-850V)	
No. of independent MPPTs/N.o of strings per MPPT	12/2	
Maximum DC input voltage	1500V	
Start-up voltage	550V	
Nominal DC input voltage	1160V	
MPPT DC voltage range	500V-1500V	
DC voltage range at full load	800V-1300V	
Maximum input current for each MPPT	30A	
Maximum absolute current for each MPPT	50A	
AC Output data		
Rated AC power	250kW	255kW
Maximum AC power	250kVA	255kVA
Maximum AC current per phase	180.5A	184A
Connection type/Rated grid voltage	Three-phase 3PH/PE 800V (PH-PH)	
Grid voltage range	370V~530V(PH-N); 640V~920V (PH-PH) (according to the local grid standards)	
Rated grid frequency	50Hz/60Hz	
Grid frequency range	45Hz~55Hz / 54Hz~66Hz (according to the local grid standards)	
Total harmonic distortion	<3%	
Power factor	1 (programmable +/-0.8)	
Active power adjustment range (settable)	0~100%	
Grid feed-in limit	Feed adjustable from zero to nominal power value**	
Efficiency		
Maximum efficiency	99.02%	
Weighted efficiency (EURO)	98.7%	
MPPT efficiency	>99.9%	
Consumption at night	<1W	
Protection		
Internal interface protection	No	
Safety protections	Anti-islanding, RCMU, Ground Fault Monitoring	
Reverse polarity protection DC	Yes	
DC circuit breaker	Integrated	
Overheating protection	Yes	
Overvoltage category/Protection class	Overvoltage Category III / Protection class I	
Integrated dischargers	AC/DC: Type 2 standard	
Standard		
EMC	EN 61000-6-2/4, EN 61000-3-11/12	
Safety standard	IEC 62109-1/2, IEC62116, IEC61727, IEC61683, IEC60068(1,2,14,30)	
Grid connectio standard	Connection certificates and standards available at www.zcsazzurro.com	
Communication		
Communication interfaces	Wi-Fi/4G/Ethernet (optional), RS485 (proprietary protocol), USB, Bluetooth	
General data		
Allowable ambient temperature range	-30°C...+60°C (power limit above 35°C)	
Topology	Transformerless	
Environmental protection class	IP66	
Allowable relative humidity range	0%.....100%	
Maximum operating altitude	5000m (power limit above 4000m)	
Noise level	< 60dB @ 1mt	
Weight	100kg	
Cooling	Forced fan convection	
Dimensions (H x L x D)	713.5mmx1100.5mm x368 mm	
Display	Led indicators, Bluetooth + app	
Warranty	5 or 10 years	

* The typical DC power does not represent a maximum applicable power limit. The online configurator available at www.zcsazzurro.com will provide any applicable configurations.
** Possible by using a specific meter

3. Monitoring systems

3.1. External Wi-Fi adapter

3.1.1. Installation

Unlike the internal Wi-Fi card, the external adapter must be installed for all compatible inverters. However, the procedure is quicker and easier as there is no need to open the front cover of the inverter.

<u>In order to monitor the inverter, the RS485 communication address must be set to 01 directly from the display.</u>

Installation tools:

- Cross screwdriver
- External Wi-Fi adapter

1) Switch off the inverter following the procedure described in this manual.
2) Remove the cover for accessing the Wi-Fi connector on the bottom of the inverter by unscrewing the two cross-head screws (a), or by unscrewing the cover (b), as shown in the figure.

(a)

(b)

Figure 35 – Port for external Wi-Fi adapter

3) Connect the Wi-Fi adapter to the appropriate port, making sure to follow the direction of the connection and ensure correct contact between the two parts.

(a)

(b)

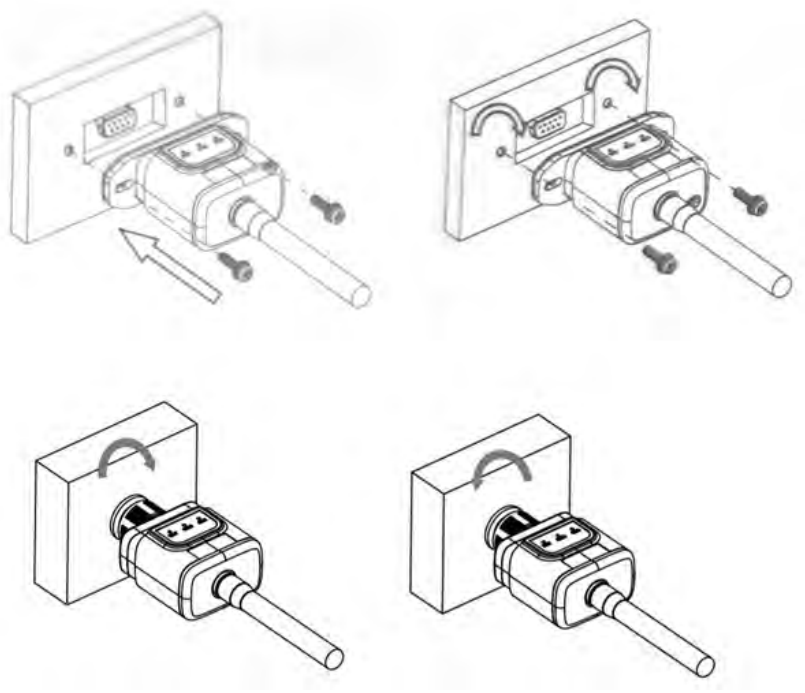

Figure 36 – Inserting and securing the external Wi-Fi adapter

4) Switch on the inverter by following the procedure described in the manual.

3.1.2.Configuration

Configuration of the Wi-Fi adapter requires the presence of a Wi-Fi network near the inverter in order to achieve stable transmission of data from the inverter adapter to the Wi-Fi modem.

Tools required for configuration:

- Smartphone, PC or tablet

Go to front of the inverter and search for the Wi-Fi network using a smartphone, PC or tablet, making sure that the signal from the home Wi-Fi network reaches the place where the inverter is installed.
If the Wi-Fi signal is present at the location where the inverter is installed, the configuration procedure can begin.
If the Wi-Fi signal does not reach the inverter, a system must be installed to amplify the signal and bring it to the installation location.

1) Activate the search for the Wi-Fi networks on your telephone or PC so that all the networks visible by your device are displayed.

Figure 37 - Search for Wi-Fi networks on iOS smartphone (left) and Android smartphone (right)

Note: Disconnect from any Wi-Fi networks to which you are connected by removing automatic access.

Figure 38 – Disabling automatic reconnection to a network

2) Connect to a Wi-Fi network generated by the inverter's Wi-Fi adapter (i.e. AP_*******, where ******* indicates the serial number of the Wi-Fi adapter shown on the label of the device), which operates as an access point.

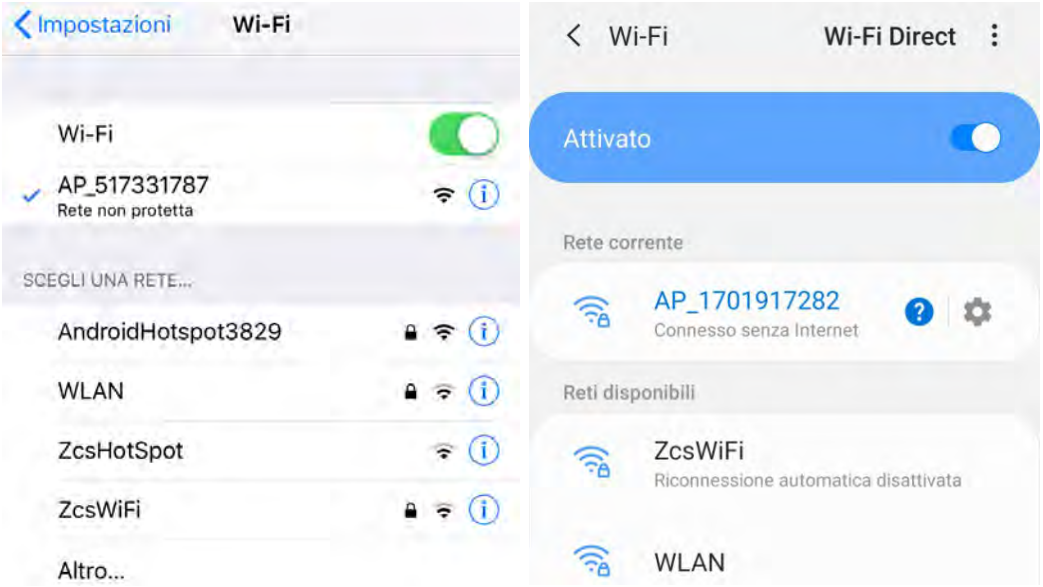

Figure 39 - Connection to Access Point for Wi-Fi adapter on iOS smartphone (left) and Android smartphone (right)

3) If you are using a second-generation Wi-Fi adapter, you will be prompted for a password to connect to the inverter's Wi-Fi network. Use the password found on the box or on the Wi-Fi adapter.

Figure 40 – Password of external Wi-Fi adapter

Note: To ensure that the adapter is connected to the PC or smartphone during the configuration procedure, enable automatic reconnection of the AP_******* network.

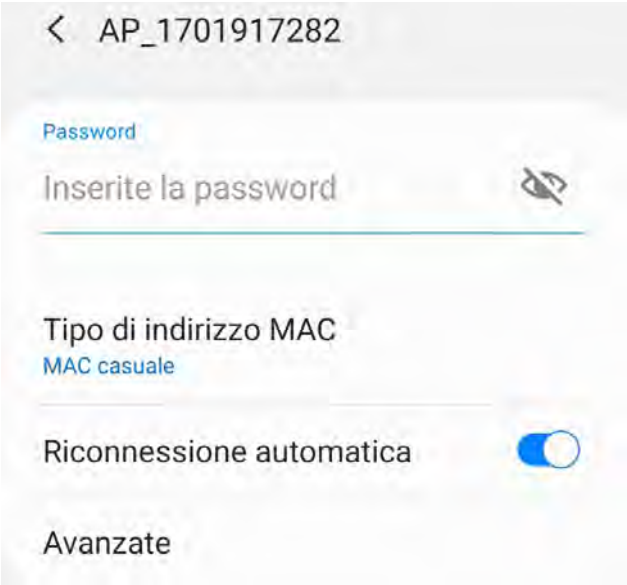

Figure 41 – Password entry prompt

Note: the Access Point is not able to provide internet access; confirm to maintain the Wi-Fi connection, even if the internet is not available

Figure 42 – Screen indicating that the Internet cannot be accessed

4) Open a browser (Google Chrome, Safari, Firefox) and enter the IP address 10.10.100.254 in the address bar at the top of the screen.
   In the box that appears, enter “admin” as both the Username and Password.

Figure 43 – Screen for accessing the web server to configure the Wi-Fi adapter

5) The status screen will open, showing the logger information such as the serial number and firmware version.

   Check that the Inverter Information fields are filled in with the inverter information.

   The language of the page can be changed using the command in the top right-hand corner.

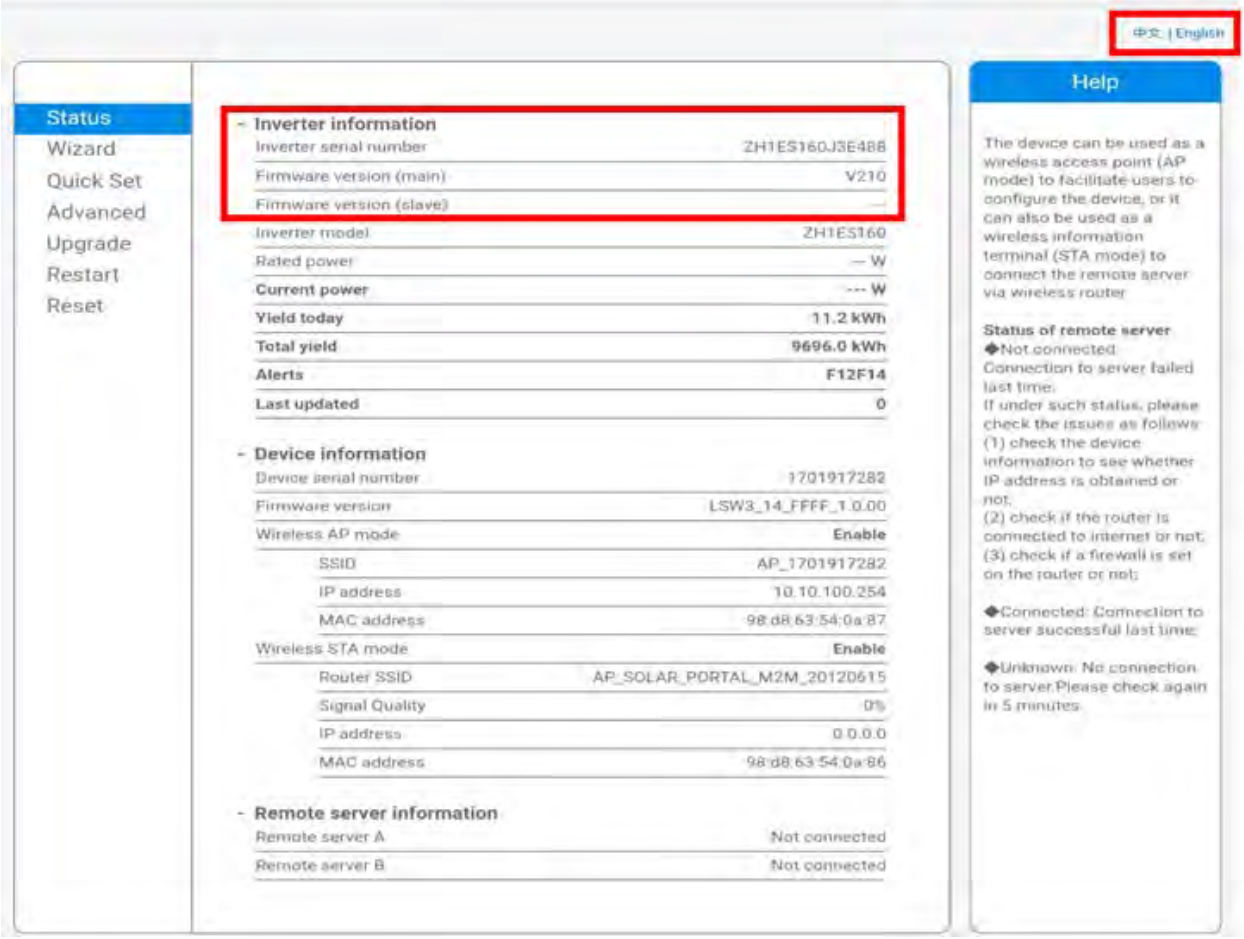

Figure 44 – Status screen

6) Click on the Wizard setup button in the left-hand column.

7) In the new screen that opens, select the Wi-Fi network to which you want to connect the Wi-Fi adapter, making sure that the Received Signal Strength Indicator (RSSI) is greater than 30%. If the network is not visible, press the Refresh button.
Note: check that the signal strength is greater than 30%, if not, bring the router closer or install a repeater or signal amplifier.
Click Next.

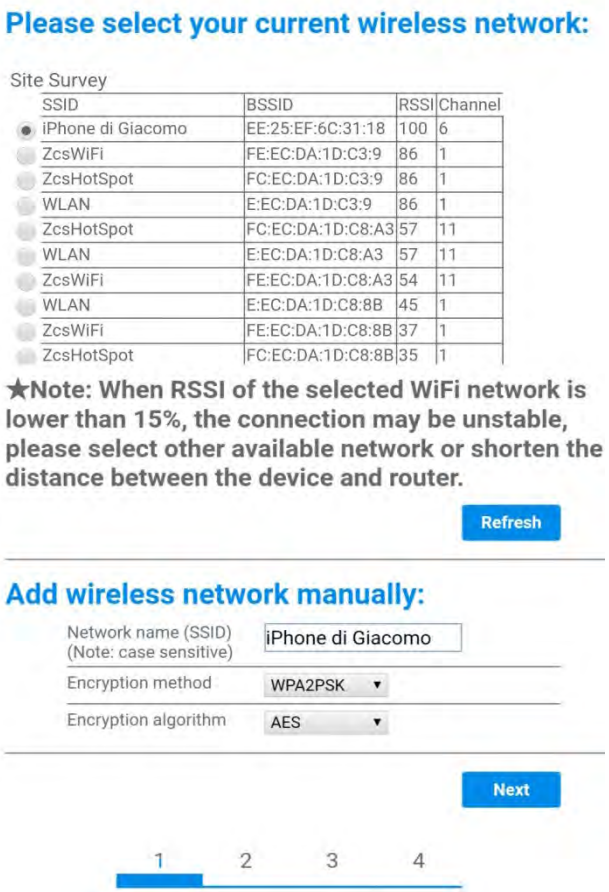

Figure 45 – Screen for selecting the available wireless network (1)

8) Enter the password of the Wi-Fi network (Wi-Fi modem), clicking on Show Password to make sure it is correct; the password should not contain special characters (&, #, %) and spaces.
Note: During this step, the system is not able to ensure that the password entered is the one actually requested by the modem, therefore please make sure you enter the correct password.
Also check that the box below is set to Enable.
Then click “Next” and wait a few seconds for verification.

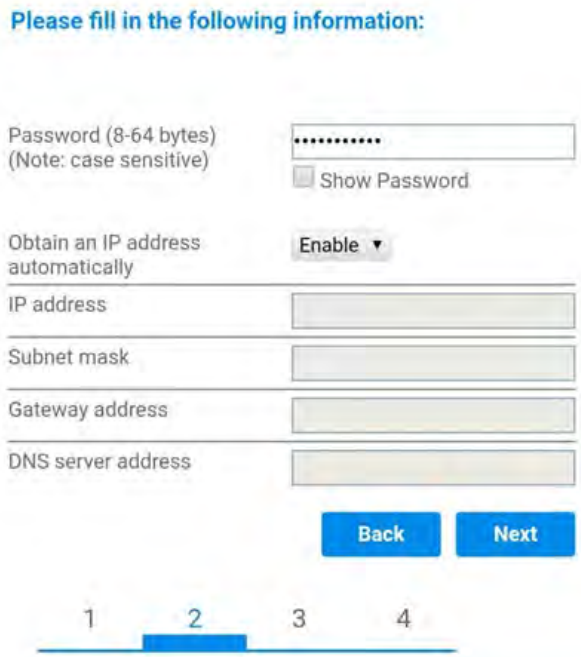

Figure 46 – Screen for entering the password of the wireless network (2)

9) Click "Next" again without ticking any of the options relating to the system security.

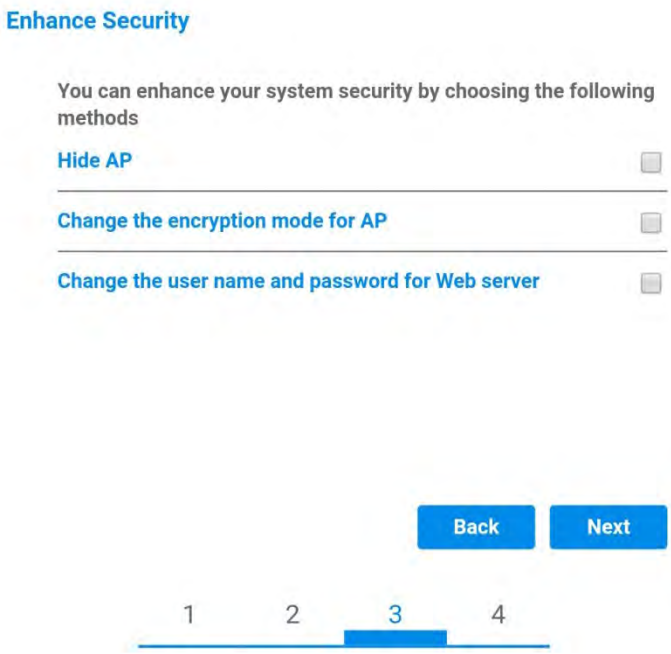

Figure 47 - Screen for setting the security options (3)

10) Click "OK".

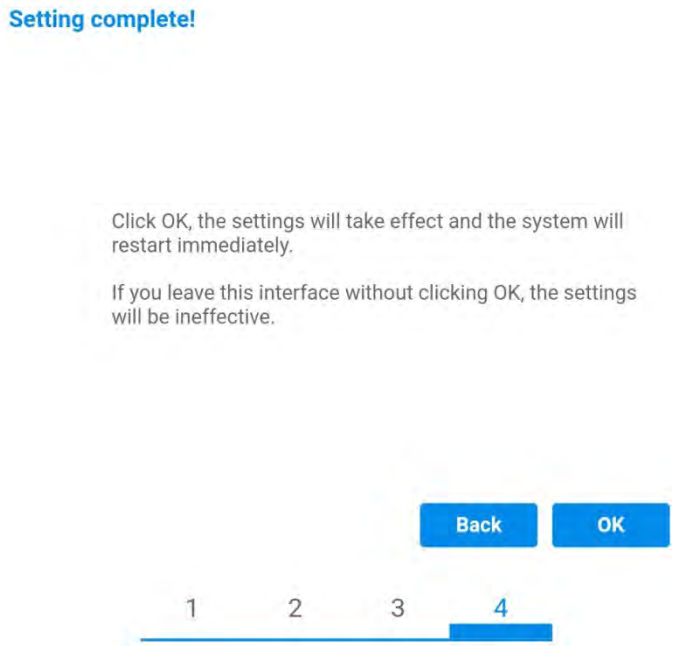

Figure 48 – Final configuration screen (4)

11) At this point, if the configuration of the adapter is successful, the last configuration screen will appear, and the telephone or PC will unpair from the inverter's Wi-Fi network.
12) Manually close the web page with the Close key on the PC por remove it from the background of the telephone.

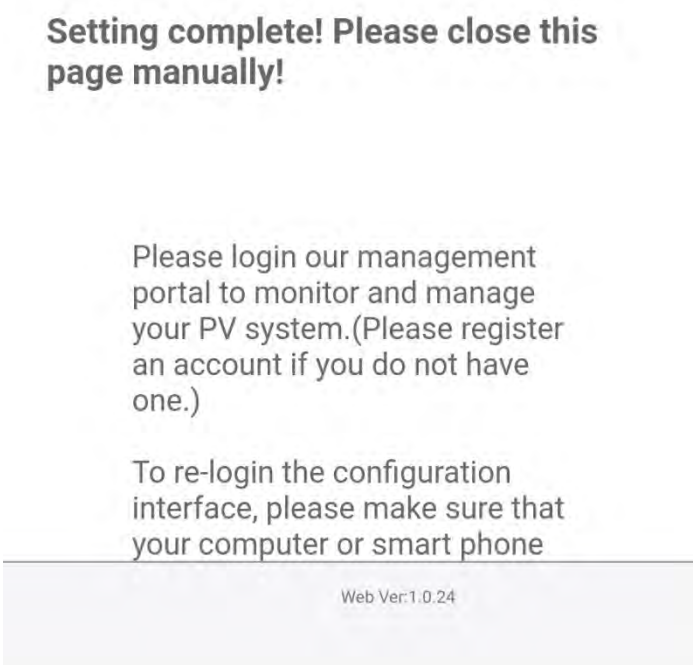

Figure 49 - Successful configuration screen

3.1.3.Verification

Wait two minutes after configuring the adapter and then go back to the Wi-Fi network selection screen to verify that the AP_******* network is no longer present. The absence of the Wi-Fi network in the list will confirm the successful configuration of the Wi-Fi adapter.

Figure 50 – Wi-Fi network search on Smartphone (iOS and Android); Access point of the Wi-Fi adapter is no longer visible

If the Wi-Fi network is still present in the list, connect to it again and enter the status page. Check the following information:

a. Wireless STA mode
   i. Router SSID > Router name
   ii. Signal Quality > other than 0%
   iii. IP address > other than 0.0.0.0
b. Remote server information
   i. Remote server A > Connected

Figure 51 – Status screen

Status of LEDs present on the adapter

1) Initial status:
   NET (left LED): off
   COM (central LED): steady on
   READY (right LED): flashing on

Figure 52 - Initial status of LEDs

2) Final status:
   NET (left LED): steady on
   COM (central LED): steady on
   READY (right LED): flashing on

Figure 53 - Final status of LEDs

If the NET LED does not light up or if the Remote Server A option in the Status page still shows “Not Connected”, the configuration was not successful, i.e. the wrong router password was entered or the device was disconnected during connection.

It is necessary to reset the adapter:

- Press the Reset button for 10 seconds and release
- After a few seconds, the LEDs will turn off and READY will start to flash quickly
- The adapter has now returned to its initial state. At this point, the configuration procedure can be repeated again.

The adapter can only be reset when the inverter is switched on.

Figure 54 – Reset button on the Wi-Fi adapter

3.1.4.Troubleshooting

Status of LEDs present on the adapter

1) Irregular communication with inverter

- NET (left LED): steady on
- COM (central LED): off
- READY (right LED): flashing on

Figure 55 - Irregular communication status between inverter and Wi-Fi

- Check the Modbus address set on the inverter:

Enter the main menu with the ESC key (first key on the left), go to System Info and press ENTER to enter the submenu. Scroll down to the Modbus address parameter and make sure it is set to 01 (and in any case, other than 00).

If the value is not 01, go to "Settings" (basic settings for hybrid inverters) and enter the Modbus Address menu where the 01 value can be set.

- Check that the Wi-Fi adapter is correctly and securely connected to the inverter, making sure to tighten the two cross-head screws provided.

- Check that the Wi-Fi symbol is present in the top right-hand corner of the inverter's display (steady or flashing).

Figure 56 – Icons on the display of LITE single-phase inverters (left) and three-phase or hybrid inverters (right)

- Restart the adapter:
  - Press the reset button for 5 seconds and release
  - After a few seconds, the LEDs will turn off and will start to flash quickly
  - The adapter will now be reset without having lost the configuration with the router

2) Irregular communication with remote server
- NET (left LED): off
- COM (central LED): on
- READY (right LED): flashing on

Figure 57 - Irregular communication status between Wi-Fi and remote server

- Check that the configuration procedure has been carried out correctly and that the correct network password has been entered.
- When searching for the Wi-Fi network using a smartphone or PC, make sure that the Wi-Fi signal is strong enough (a minimum RSSI signal strength of 30% is required during configuration). If necessary, increase it by using a network extender or a router dedicated to inverter monitoring.
- Check that the router has access to the network and that the connection is stable; check that a PC or smartphone can access the Internet
- Check that port 80 of the router is open and enabled to send data
- Reset the adapter as described in the previous section

If, at the end of the previous checks and subsequent configuration, Remote server A is still "Not Connected" or the NET LED is off, there may be a transmission problem at the home network level and, more specifically, that data between the router and server is not being transmitted correctly. In this case, it is advisable to carry out checks at the router level in order to ensure that there are no obstructions on the output of data packets to our server.
To make sure that the problem lies in the home router and to exclude problems with the Wi-Fi adapter, configure the adapter using the Wi-Fi hotspot function on your smartphone as a reference wireless network.

- **Using an Android mobile phone as a modem**

a) Check that the 3G/LTE connection is active on your smartphone. Go to the Settings menu of the operating system (the gear icon on the screen with a list of all the apps installed on the phone), select "Other" from the Wireless and networks menu and make sure that the Network type is set to 3G/4G/5G.
b) In the Android settings menu, go to Wireless & networks > Other. Select Mobile Hotspot/Tethering, and then enable the Wi-Fi mobile hotspot option; wait a few seconds for the wireless network to be created. To change the name of the wireless network (SSID) or your password, select Configure Wi-Fi hotspot.

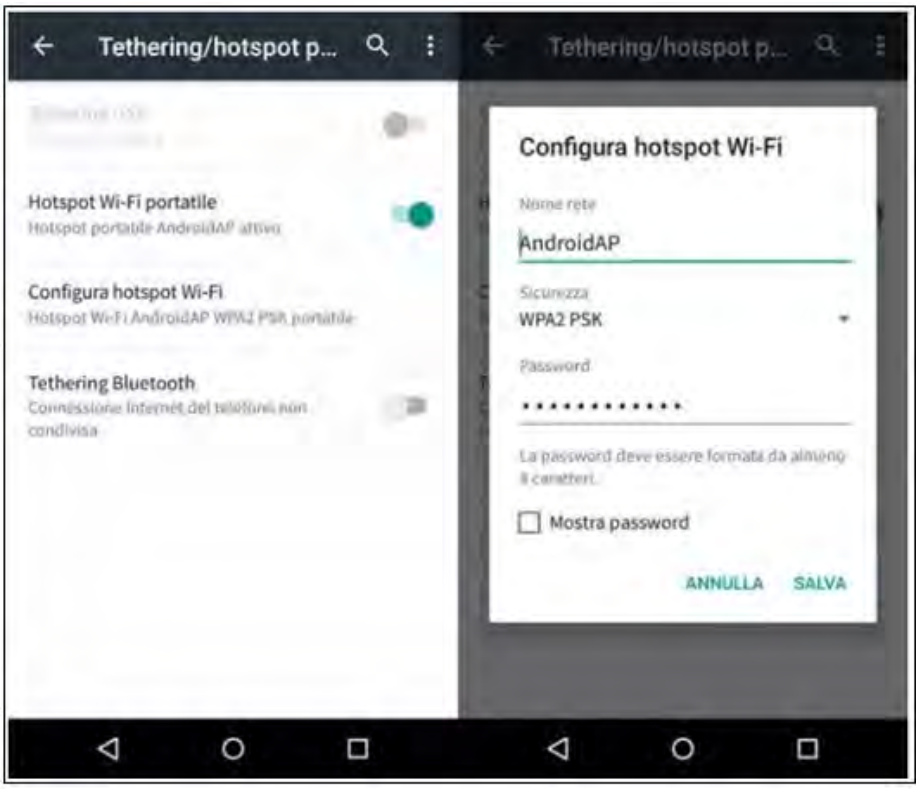

Figure 58 – Configuration of an Android smartphone as a hotspot router

- **Using an iPhone as a modem**
  a) In order to share the iPhone connection, verify that the 3G/LTE network is active by going to Settings > Mobile Phone, and making sure that the "Voice and data" option is set to 5G, 4G or 3G. To enter the iOS settings menu, click the grey gear icon on the home screen of your phone.
  b) Go to the Settings menu > Personal Hotspot and turn on the Personal Hotspot option. The hotspot is now enabled. To change the password of the Wi-Fi network, select Wi-Fi password from the personal hotspot menu.

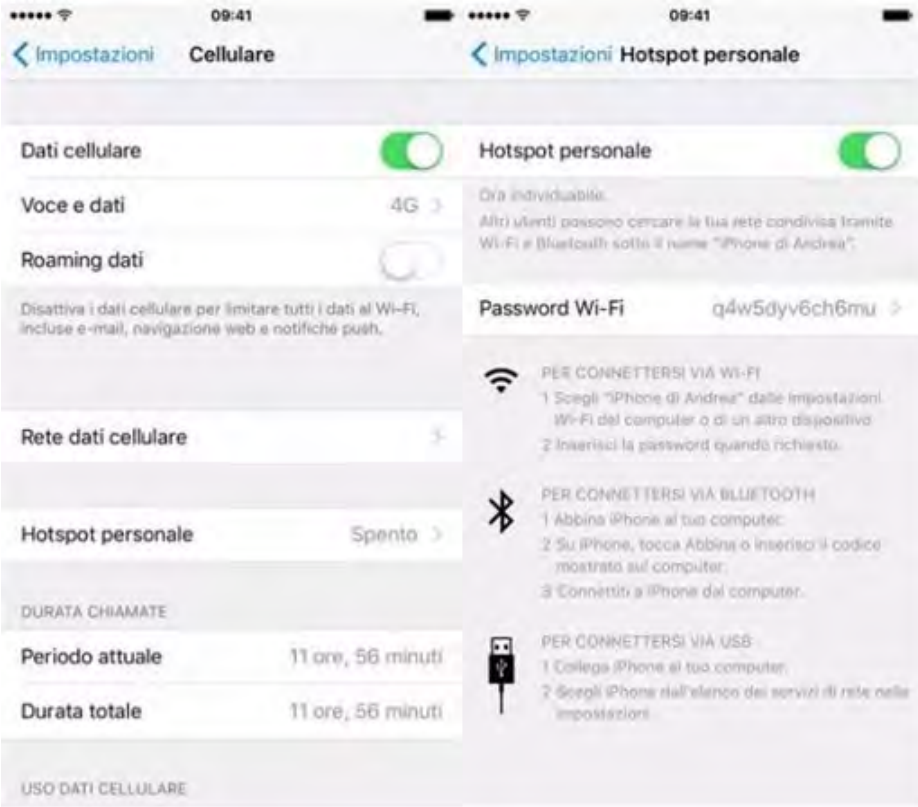

Figure 59 - Configuration of an iOS smartphone as a hotspot router

At this point, it is necessary to re-configure the Wi-Fi adapter using a PC or smartphone other than the one used as a modem.
During this procedure, when asked to select the Wi-Fi network, choose the one activated by the smartphone and then enter the password associated with it (which can be changed from the personal hotspot settings). If at the end of configuration, “Connected” appears next to “Remote Server A”, then the problem is with the home router.
It is therefore advisable to check the brand and model of the home router you are trying to connect to the Wi-Fi adapter; some router brands may have closed communication ports. In this case, contact the customer service of the router’s manufacturer and ask them to open port 80 (direct from the network to external users).

3.2. Ethernet adapter

3.2.1. Installation

Installation must be carried out for all inverters compatible with the adapter. However, the procedure is quicker and easier as there is no need to open the front cover of the inverter. Proper operation of the device requires the presence of a modem correctly connected to the network and in operation in order to achieve stable data transmission from the inverter to the server.

In order to monitor the inverter, the RS485 communication address must be set to 01 directly from the display.

Installation tools:

- Cross screwdriver
- Ethernet adapter
- Shielded network (Cat. 5 or Cat. 6) crimped with RJ45 connectors

1) Switch off the inverter following the procedure described in this manual.
2) Remove the cover for accessing the Wi-Fi/Eth connector on the bottom of the inverter by unscrewing the two cross-head screws (a), or by unscrewing the cover (b), depending on the inverter model, as shown in the figure.

(a)

(b)

Figure 60 – Port of the Ethernet adapter

3) Remove the ring nut and the waterproof cable gland from the adapter to allow the network cable to pass through; then insert the network cable network into the appropriate port on the inside of the adapter and tighten the ring nut and cable gland to ensure a stable connection.

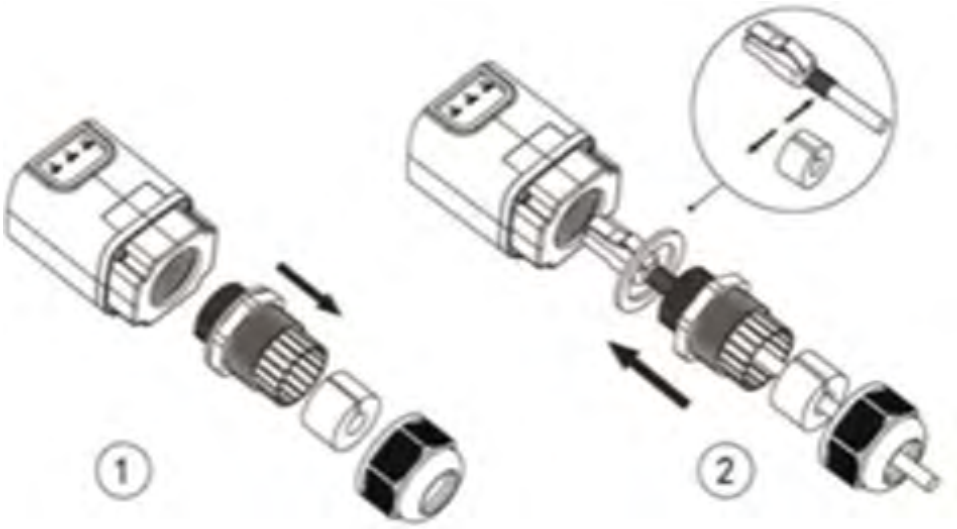

Figure 61 – Inserting the network cable inside the device

4) Connect the Ethernet adapter to the appropriate port, making sure to follow the direction of the connection and ensure correct contact between the two parts.

(a)

(b)

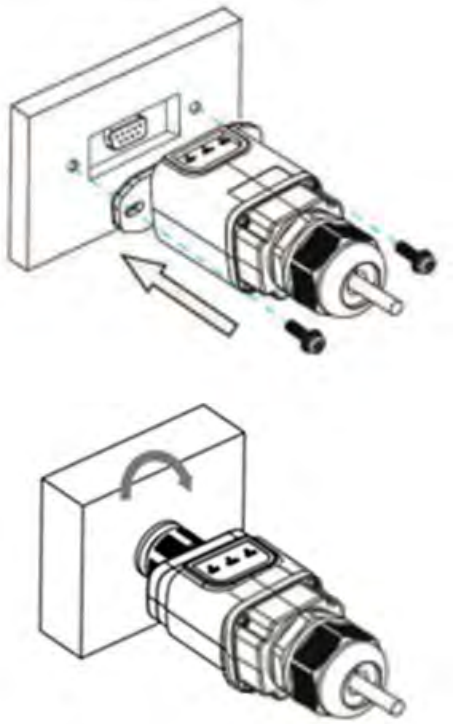

Figure 62 – Inserting and securing the ethernet adapter

5) Connect the other end of the network cable to the ETH output (or equivalent) of the modem or a suitable data transmission device.

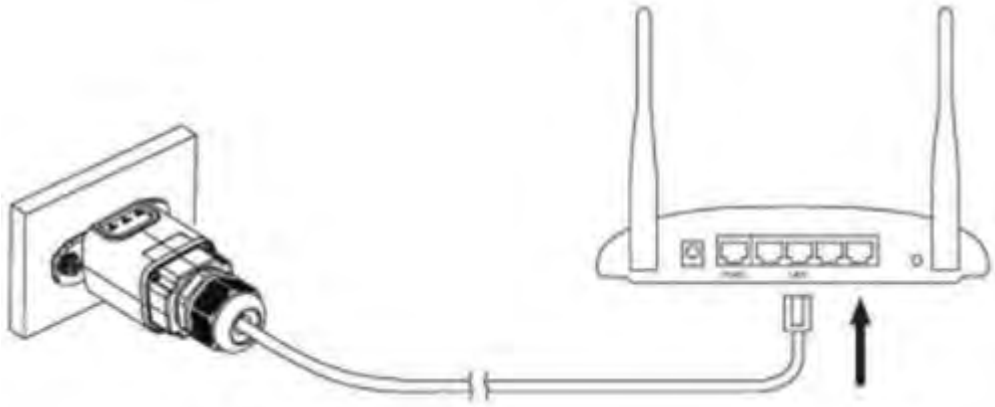

Figure 63 – Connecting the network cable to the modem

6) Switch on the inverter by following the procedure described in the manual.

7) Unlike Wi-Fi cards, the Ethernet adapter does not need to be configured and starts transmitting data shortly after the inverter is switched on.

3.2.2.Verification

Wait two minutes after installing the adapter, and check the status of the LEDs on the device.

Status of LEDs present on the adapter

1) Initial status:
   NET (left LED): off
   COM (central LED): steady on
   SER (right LED): flashing on

Figure 64 - Initial status of LEDs

2) Final status:
NET (left LED): steady on
COM (central LED): steady on
SER (right LED): flashing on

Figure 65 - Final status of LEDs

3.2.3.Troubleshooting

Status of LEDs present on the adapter

1) Irregular communication with inverter

- NET (left LED): steady on
- COM (central LED): off
- SER (right LED): flashing on

Figure 66 - Irregular communication status between the inverter and adapter

- Check the Modbus address set on the inverter:
  Enter the main menu with the ESC key (first key on the left), go to System Info and press ENTER to enter the submenu. Scroll down to the Modbus address parameter and make sure it is set to 01 (and in any case, other than 00).
  If the value is not 01, go to "Settings" (basic settings for hybrid inverters) and enter the Modbus Address menu where the 01 value can be set.
- Check that the Ethernet adapter is correctly and securely connected to the inverter, making sure to tighten the two cross-head screws provided. Check that the network cable is correctly inserted into the device and modem, and that the RJ45 connector is correctly crimped.

2) Irregular communication with remote server

- NET (left LED): off
- COM (central LED): on
- SER (right LED): flashing on

Figure 67 - Irregular communication status between the adapter and remote server

- Check that the router has access to the network and that the connection is stable; check that a PC can access the Internet

  Check that port 80 of the router is open and enabled to send data.
  It is advisable to check the brand and model of the home router you are trying to connect to the Ethernet adapter; some router brands may have closed communication ports. In this case, contact the customer service of the router's manufacturer and ask them to open port 80 (direct from the network to external users).

3.3. 4G adapter

The ZCS 4G adapters are sold with a virtual SIM integrated into the device with data traffic fee included for10 years, which is adequate for the proper transmission of data to monitor the inverter.

In order to monitor the inverter, the RS485 communication address must be set to 01 directly from the display.

3.3.1.Installation

Installation must be carried out for all inverters compatible with the adapter. However, the procedure is quicker and easier as there is no need to open the front cover of the inverter.

Installation tools:

- Cross screwdriver
- 4G adapter

1) Switch off the inverter following the procedure described in this manual.
2) Remove the cover for accessing the Wi-Fi/ GPRS connector on the bottom of the inverter by unscrewing the two cross-head screws (a), or by unscrewing the cover (b), depending on the inverter model, as shown in the figure.

(a)

(b)

Figure 68 – Port of the 4G adapter

3) Insert the 4G adapter into the appropriate port, making sure to follow the direction of the connection and ensure correct contact between the two parts. Secure the 4G adapter by tightening the two screws inside the package.

(a)

(b)

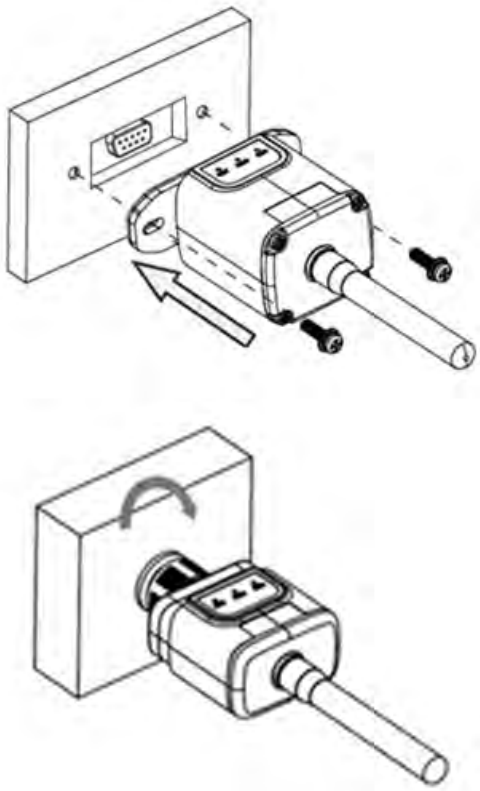

Figure 69 – Inserting and securing the 4G adapter

4) Switch on the inverter by following the procedure described in the manual.
5) Unlike Wi-Fi cards, the 4G adapter does not need to be configured and starts transmitting data shortly after the inverter is switched on.

3.3.2.Verification

After installing the adapter, within the next 3 minutes check the status of the LEDs on the device to ensure that the device is configured correctly.

Status of LEDs present on the adapter

1) Initial status:

- NET (left LED): off
- COM (central LED): flashing on
- SER (right LED): flashing on

Figure 70 - Initial status of LEDs

2) Registration:

- NET (left LED): flashes rapidly for about 50 seconds; the registration process takes about 30 seconds
- COM (central LED): flashes rapidly 3 times after 50 seconds

3) Final status (approx. 150 seconds after the inverter has started):

- NET (left LED): flashing on (off and on at equal intervals)
- COM (central LED): steady on
- SER (right LED): steady on

Figure 71 - Final status of LEDs

Status of LEDs present on the adapter

1) Irregular communication with inverter

- NET (left LED): on
- COM (central LED): off
- SER (right LED): on

Figure 72 - Irregular communication status between inverter and adapter

- Check the Modbus address set on the inverter:
  Enter the main menu with the ESC key (first key on the left), go to System Info and press ENTER to enter the submenu. Scroll down to the Modbus address parameter and make sure it is set to 01 (and in any case, other than 00).

  If the value is not 01, go to "Settings" (basic settings for hybrid inverters) and enter the Modbus Address menu where the 01 value can be set.

- Check that the 4G adapter is correctly and securely connected to the inverter, making sure to tighten the two cross-head screws provided.

2) Irregular communication with remote server:

- NET (left LED): flashing on
- COM (central LED): on
- SER (right LED): flashing on

Figure 73 - Irregular communication status between the adapter and remote server

- Check that the 4G signal is present in the installation location (the adapter uses the Vodafone network for 4G transmission; if this network is not present or the signal is weak, the SIM will use a different network or will limit the data transmission speed). Ensure that the installation location is suitable for 4G signal transmission and that there are no obstacles that could affect data transmission.

- Check the status of the 4G adapter and that there are no external signs of wear or damage.

3.4. Datalogger

3.4.1.Preliminary notes on how to configure the datalogger

The AzzurroZCS inverters can be monitored via a datalogger connected to a Wi-Fi network present at the place of installation or via an ethernet cable connected to a modem.
The inverters are connected in a daisy chain to the datalogger via a RS485 serial line.

- Datalogger up to 4 inverters (code ZSM-DATALOG-04): allows to monitor up to 4 inverters.

  It can be connected to the network via an Ethernet or Wi-Fi network.
- Datalogger up to 10 inverters (code ZSM-DATALOG-10): allows to monitor up to 10 inverters.

  It can be connected to the network via an Ethernet or Wi-Fi network.

Figure 74 – Diagram for connecting the ZSM-DATALOG-04 / ZSM-DATALOG-10 datalogger

- Datalogger up to 31 inverters (code ZSM-RMS001/M200): allows to monitor up to 31 inverters or a system with a maximum installed power of 200kW.

  It can be connected to the network via an Ethernet cable.
- Datalogger up to 31 inverters (code ZSM-RMS001/M1000): allows to monitor a maximum of 31 inverters or a system with a maximum installed power of 1000kW.

  It can be connected to the network via an Ethernet cable.

Figure 75 – Diagram showing the operation of the ZSM-RMS001/M200 / ZSM-RMS001/M1000 datalogger

All these devices carry out the same function, i.e. they transmit data from the inverters to a web server to allow remote monitoring of the system either through the "Azzurro Monitoring" app or through the "www.zcsazzurroportal.com" website.

All the Azzurro ZCS inverters can be monitored using the datalogger; different models or families of inverters can also be monitored.

3.4.2.Electrical connections and configuration

All the Azzurro ZCS inverters have at least one RS485 connection point.
The connections can be made via the green terminal block or via the RJ45 plug inside the inverter.
Use positive and negative conductors. There is no need to use a conductor for the GND. This applies to both the terminal block and the plug.
The serial line can be created using a Cat. 5 or Cat. 6 network cable, or a classic RS485 2x0.5mm² cable.

1) In the case of three-phase inverters, a suitably crimped network cable with a RJ45 connector can also be used:

   a. Place the blue cable in position 4 of the RJ45 connector and the white-blue cable in position 5 of the RJ45 connector, as shown in the figure below.

   b. Insert the connector into the 485-OUT terminal.

   c. If there is more than one three-phase inverter, insert another connector in the 485-IN terminal to connect to the 485-OUT input of the next inverter.

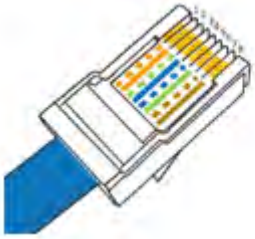

RJ 45	Colore	Monofase	Trifase
4	Blu	TX +	485 A
5	Bianco-Blu	TX -	485 B

Figure 76 – Pin out for connecting the RJ45 connector

2) Daisy chain

a. Insert the blue cable into input A1 and the white-blue cable into input B1.

b. If there is more than one three-phase inverter, insert a blue cable into input A2 and a white-blue cable into input B2 and connect them to the respective A1 and B1 inputs of the next inverter.

Some inverters have both an RS485 terminal block and RJ45 plugs. This is shown in detail in the figure below.

Figure 77 – Tightening the network cable to the RS485 terminal block

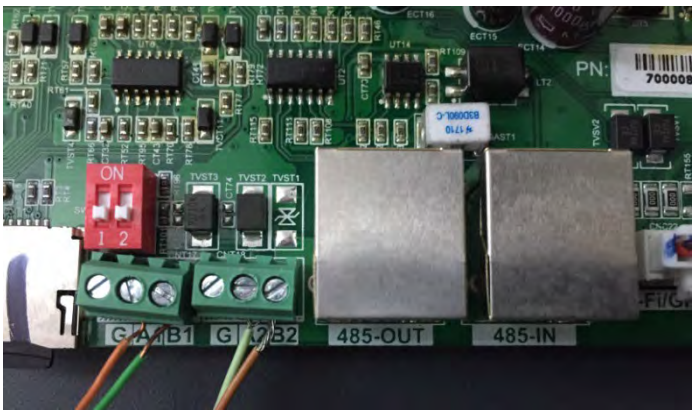

Figure 78 – Connecting the serial line via the RS485 terminal block and via the RJ45 plug

For the 3PH 250-255KTL-HV three-phase inverter, use only one positive and one negative of those shown in the figure below.

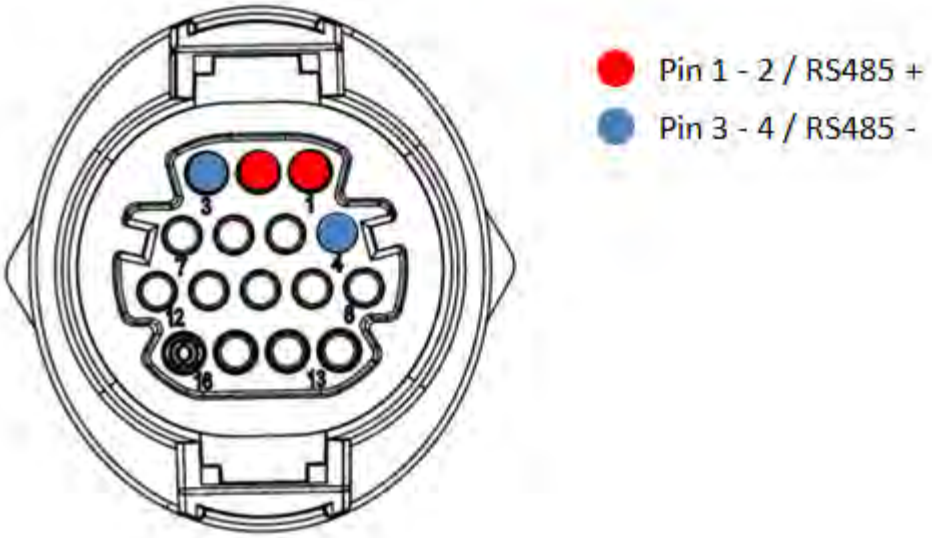

Figure 79a – Connecting the serial line via the communication connector for 3PH 250-255KTL-HV

For the 3PH 250-255KTL-HV three-phase inverter and the 3000-6000 TLM-V3 photovoltaic inverter, use only one positive and one negative of those shown in the figure below.

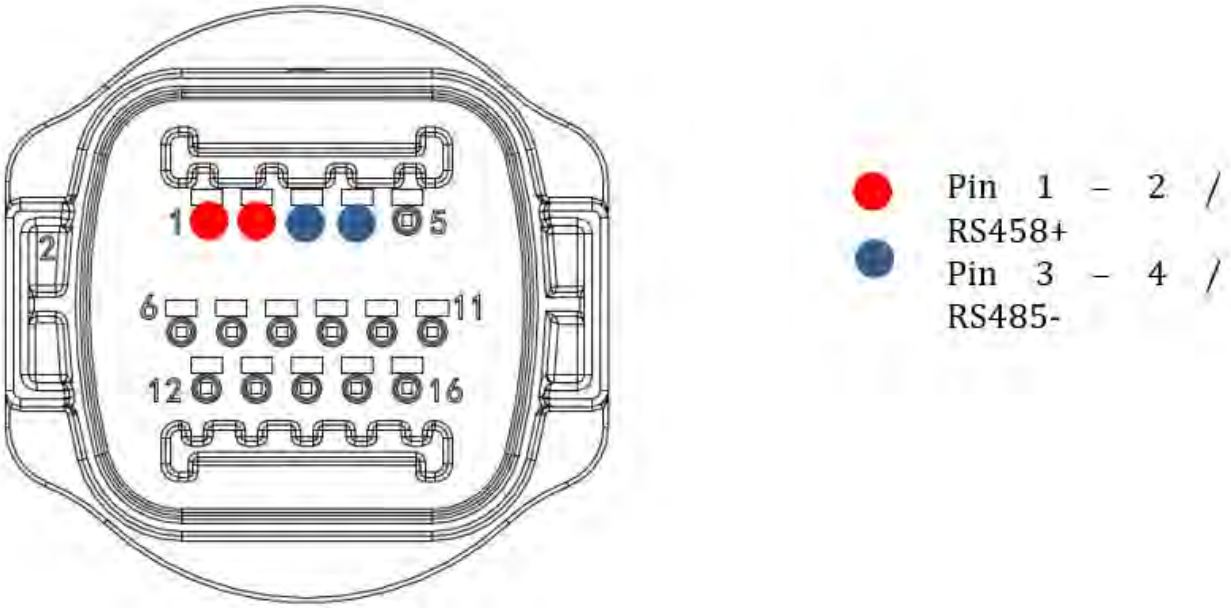

Figure 79b – Connecting the serial line via the communication connector for 1PH 3000-6000 TLM-V3, 3PH 250-255KTL-HV

For the 1PH HYD3000-HYD6000-ZSS-HP single-phase hybrid inverter, use only one positive and one negative of those shown in the figure below.

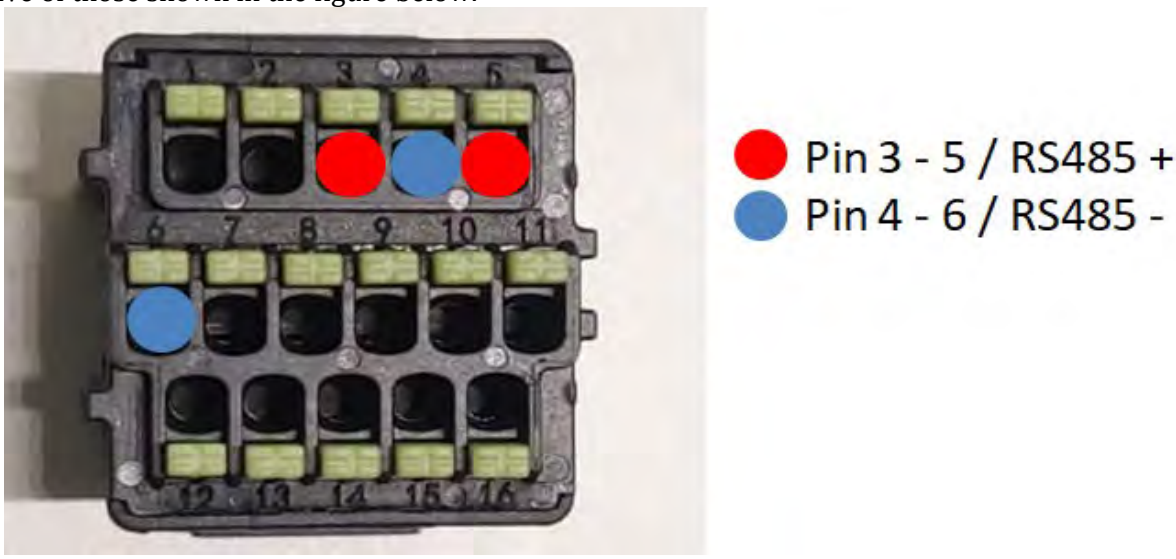

Figure 79c – Connecting the serial line via the communication connector for 1PH HYD3000-HYD6000-HP

c. Position the dip switches of the last inverter of the daisy chain as shown in the figure below for activating the 120 Ohm resistor and closing the communication chain. If there are no switches, physically connect a 120 Ohm resistor to terminate the bus.

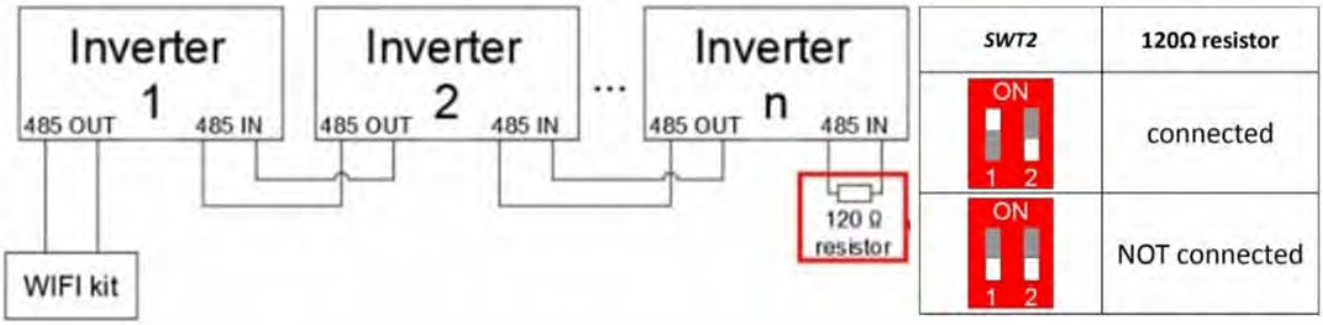

Figure 80 – Positioning of dip switches to connect the isolation resistor

3) Check that the RS485 icon is shown on the display of all the inverters. This indicates that the inverters are actually connected via the serial line. If this symbol does not appear, check that the connection is correct, as indicated in this guide.

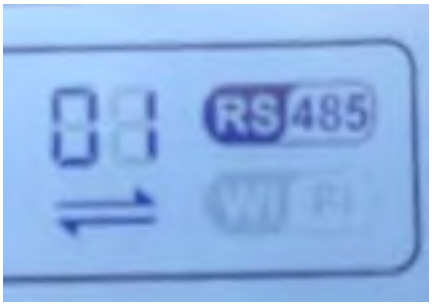

Figure 81 – RS485 symbol on the display of the inverter

4) Set a sequential Modbus address on each inverter connected:

   a. Enter the "Settings" menu.
   b. Scroll to the submenu "Modbus Address."
   c. Change the digits and set an increasing address on each inverter, starting from 01 (first inverter) to the last inverter connected. The Modbus address will be shown on the display of the inverter alongside the RS485 symbol. There should be no inverters with the same Modbus address.

3.4.3.ZSM-DATALOG-04 AND ZSM-DATALOG-10 DEVICES

The initial status of the LEDs on the datalogger will be:

- POWER steady on
- 485 steady on
- LINK off
- STATUS steady on

3.4.4.WI-FI CONFIGURATION

To configure the datalogger via Wi-Fi, please refer to the chapter on monitoring systems, as the configuration is similar to that of any type of Wi-Fi adapter.

3.4.5.Ethernet configuration

1) Insert the RJ45 connector of the Ethernet cable in the ETHERNET input of the datalogger.

Figure 82 – Ethernet cable connected to the datalogger

2) Connect the other end of the Ethernet cable to the ETH output (or equivalent) of the modem or a suitable data transmission device.

3) Activate the search for Wi-Fi networks on your phone or PC in order to display all the networks visible from your device.

Figure 83 - Wi-Fi network search on iOS smartphone (left) and Android (right)

Note: Disconnect from any Wi-Fi networks to which you are connected by removing automatic access.

Figure 84 - Disabling automatic reconnection to a network

4) Connect to a Wi-Fi network generated by the datalogger (i.e. AP_*******, where ******* indicates the serial number of the datalogger shown on the label of the device), which operates as an Access Point.

5) Note: To ensure that the datalogger is connected to the PC or smartphone during the configuration procedure, enable automatic reconnection of the AP_******* network.

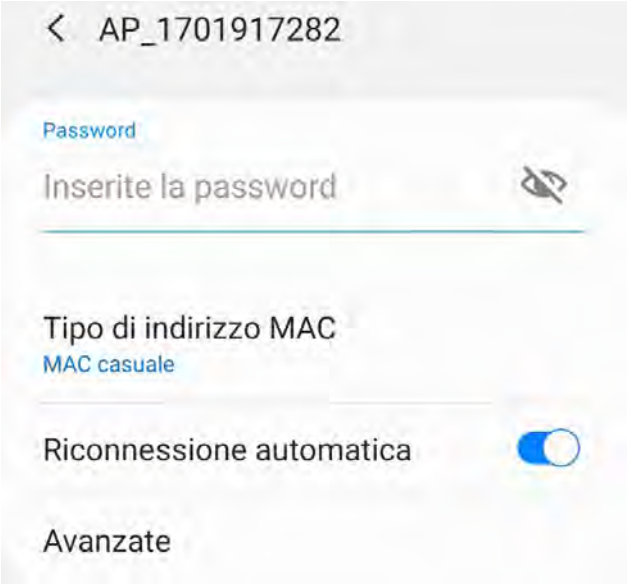

Figure 85 - Password entry prompt

Note: the Access Point is not able to provide internet access; confirm to maintain the Wi-Fi connection, even if internet is not available.

Figure 86 - Screen showing that the Internet cannot be accessed

6) Open a browser (Google Chrome, Safari, Firefox) and enter the IP address 10.10.100.254 in the address bar at the top of the screen.
In the box that appears, enter "admin" as both Username and Password.

Figure 87 - Screen for logging into the web server to configure the datalogger

7) The status screen will open, showing the datalogger information such as serial number and firmware version.

Check that the fields relating to the Inverter Information are filled in with the information of all the inverters connected.

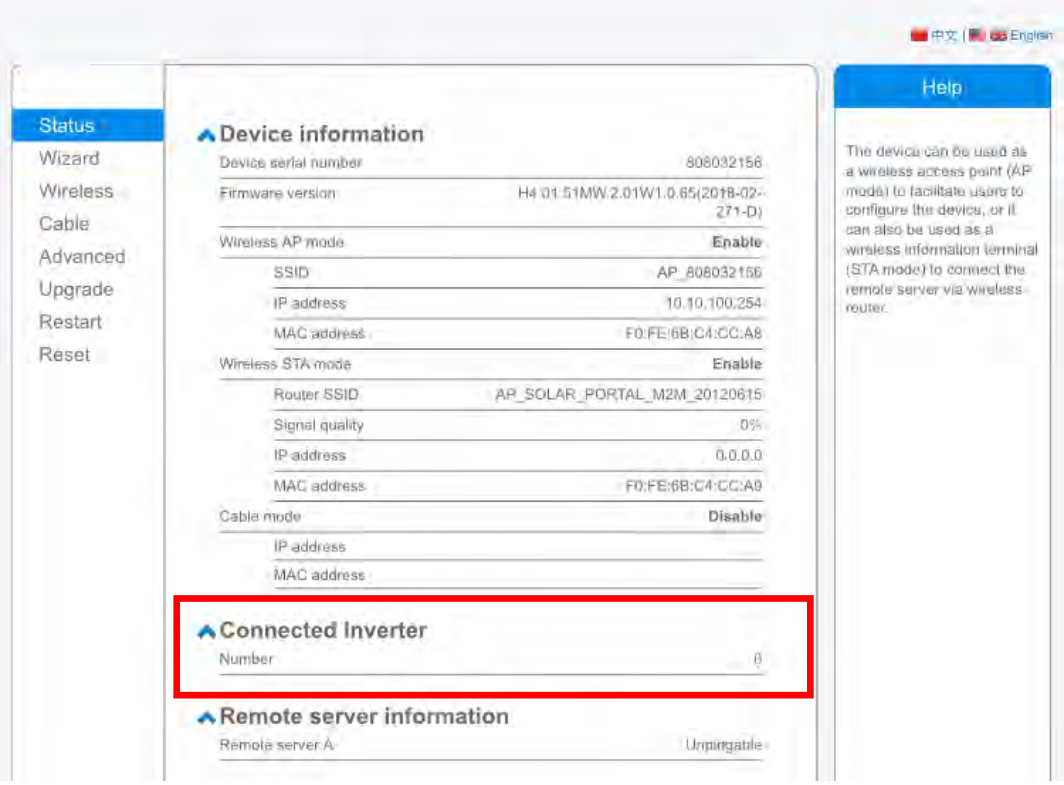

Figure 88 – Status Screen

8) Click on the Wizard setup button in the left-hand column.

9) Now click on the Start button to start the configuration wizard.

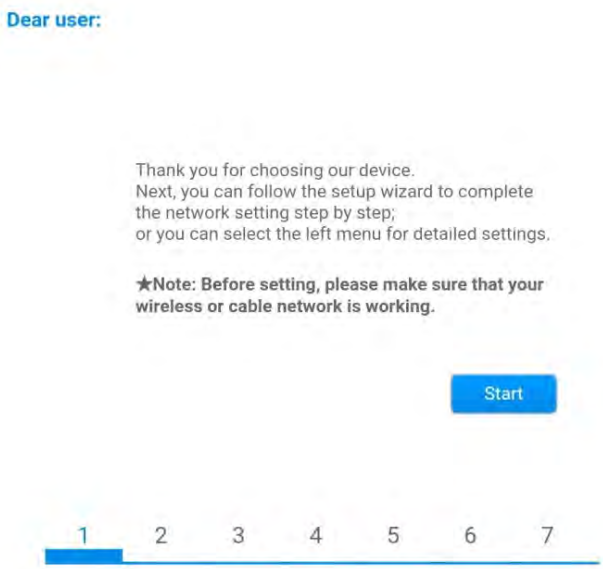

Figure 89 – Screen for starting (1) the Setup Wizard

10) Check the “Cable Connection” option and then click “Next.”

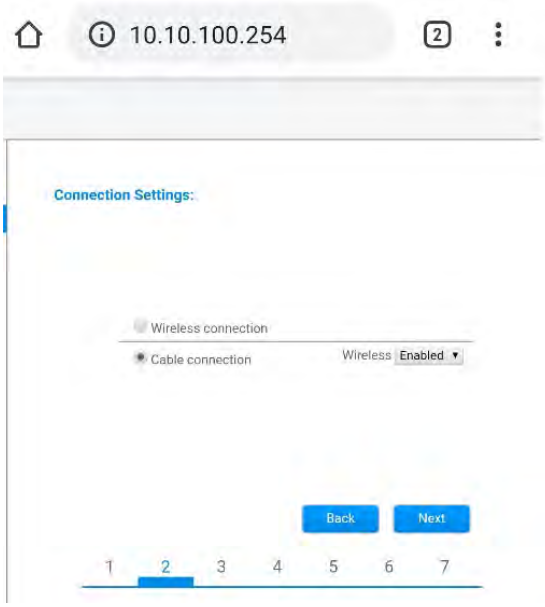

Figure 90 - Network cable connection selection screen

11) Make sure that the “Enable” option is selected to automatically obtain the IP address from your router, then click Next.

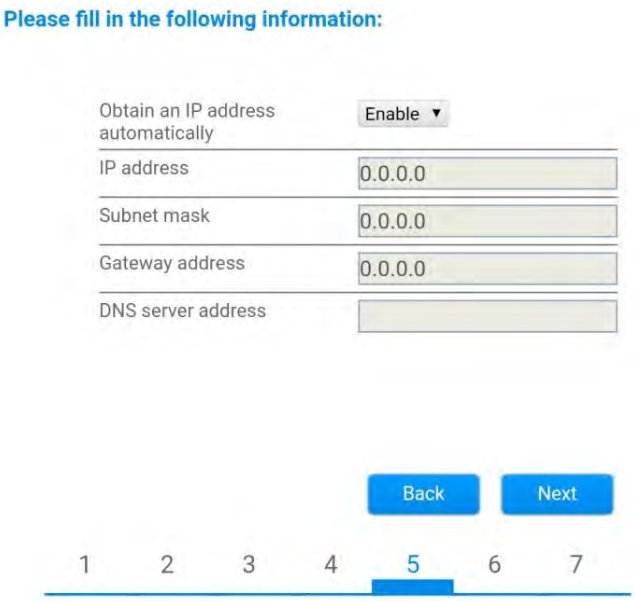

Figure 91 – Screen for automatically obtaining the IP address (5)

12) Click on Next without making any changes.

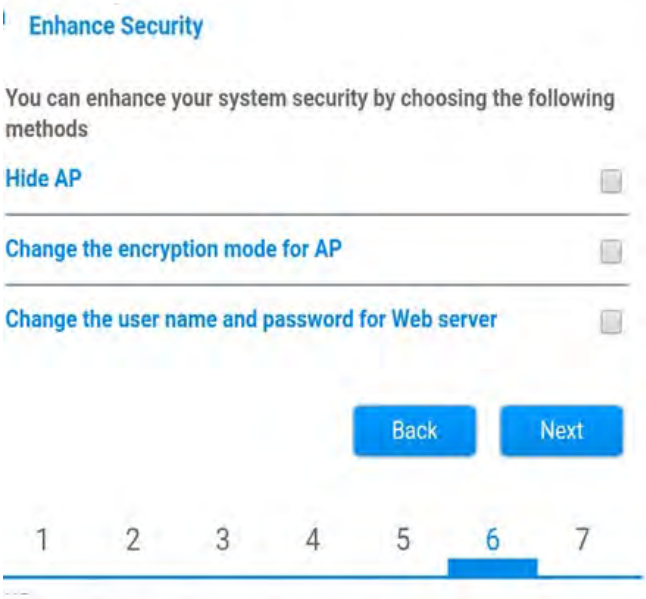

Figure 92 - Screen for setting the security options (6)

13) Complete the configuration procedure by clicking OK, as shown in the following screen.

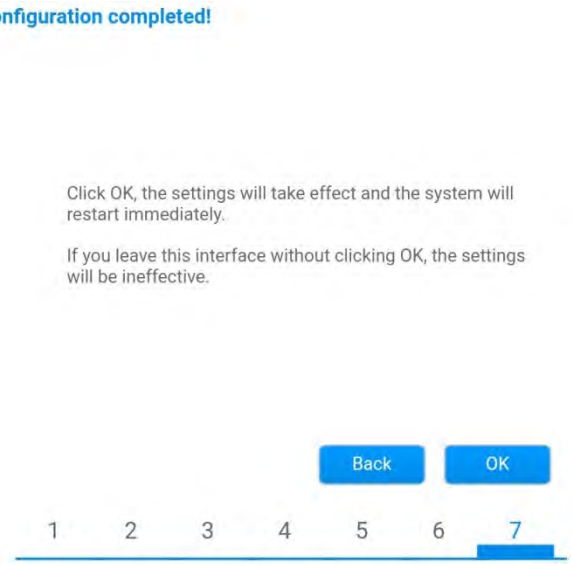

Figure 93 – Final configuration screen (7)

14) If the configuration procedure is successful, the following screen will appear.

If this screen does not appear, try refreshing the browser page.
The screen will prompt you to manually close the page; close the page from the background of your phone or from the close button on your PC.

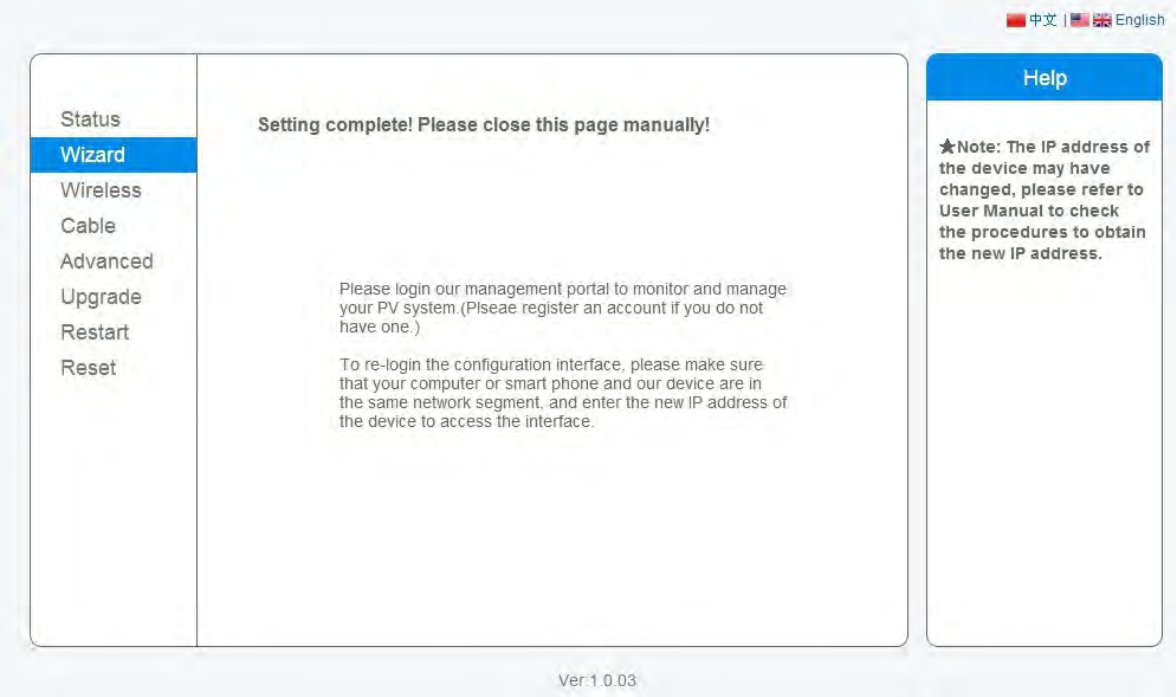

Figure 94 – Successful configuration screen

3.4.6.Checking that the datalogger has been configured correctly

Wait two minutes after completing the configuration of the device.
First of all, check that the LINK LED on the device is on and steady.

Figure 95 – LED indicating the correct configuration of the datalogger

Enter the IP address 10.10.100.254 again, and the login credentials ("admin" for both username and password). Once logged in, the Status screen will appear, where the following information can be checked:

- Check Wireless STA mode (if the datalogger has been configured via Wi-Fi)
    - Router SSID > Router name
    - Signal Quality > other than 0%
    - IP address > other than 0.0.0.0
- Check Cable mode (if the datalogger has been configured via Ethernet cable)
    - IP address > other than 0.0.0.0
- Check Remote server information
    - Remote server A > Pingable

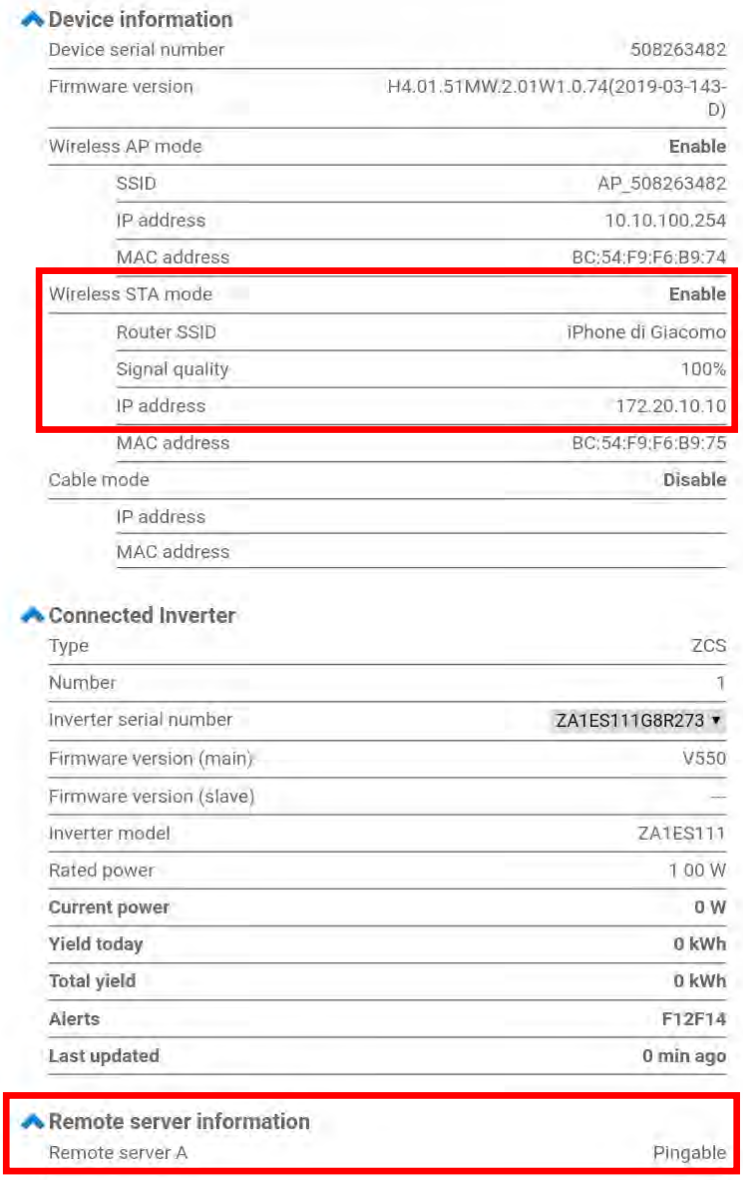

Device information

Device serial number	508263482
Firmware version	H4.01.51MW.2.01W1.0.74(2019-03-143-D)
Wireless AP mode	**Enable**
SSID	AP_508263482
IP address	10.10.100.254
MAC address	BC:54:F9:F6:B9:74
Wireless STA mode	**Enable**
Router SSID	iPhone di Giacomo
Signal quality	100%
IP address	172.20.10.10
MAC address	BC:54:F9:F6:B9:75
Cable mode	**Disable**
IP address	
MAC address	

Connected Inverter

Type	ZCS
Number	1
Inverter serial number	ZA1ES111G8R273 ▾
Firmware version (main)	V550
Firmware version (slave)	—
Inverter model	ZA1ES111
Rated power	1 00 W
Current power	**0 W**
Yield today	**0 kWh**
Total yield	**0 kWh**
Alerts	**F12F14**
Last updated	**0 min ago**

Remote server information

Remote server A	Pingable

Figure 96 – Main status screen and checking of correct configuration

Cable mode	**Enable**
IP address	192.168.0.177
MAC address	BC:54:F9:F6:B9:77

Figure 97 - main status screen and checking of correct configuration

If the Remote Server A item in the Status page is still "Unpingable", the configuration was not successful, i.e. the incorrect router password was entered or the device was disconnected during connection.
It is necessary to reset the device:

- Select the Reset button in the left-hand column
- Press the OK button to confirm
- Close the web page and enter the Status page again. At this point, the configuration procedure can be

repeated again.

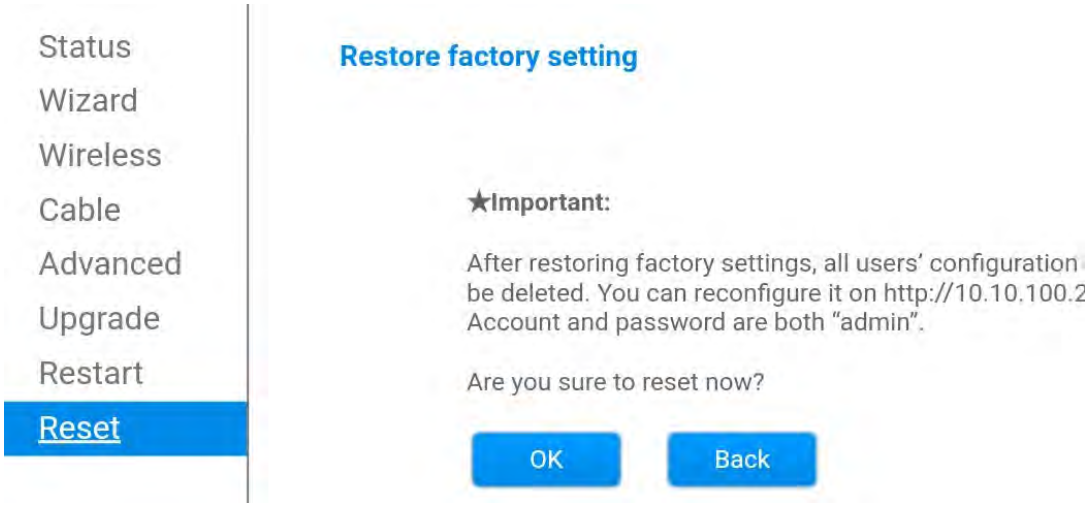

Figure 98 – Reset Screen

3.4.7.ZSM-RMS001/M200 and ZSM-RMS001/M1000 Devices

3.4.7.1. Mechanical description and Datalogger interface

Mechanical Dimensions: 127mm x 134 x 52 mm
Protection rating: IP20

The usable ports are indicated below.

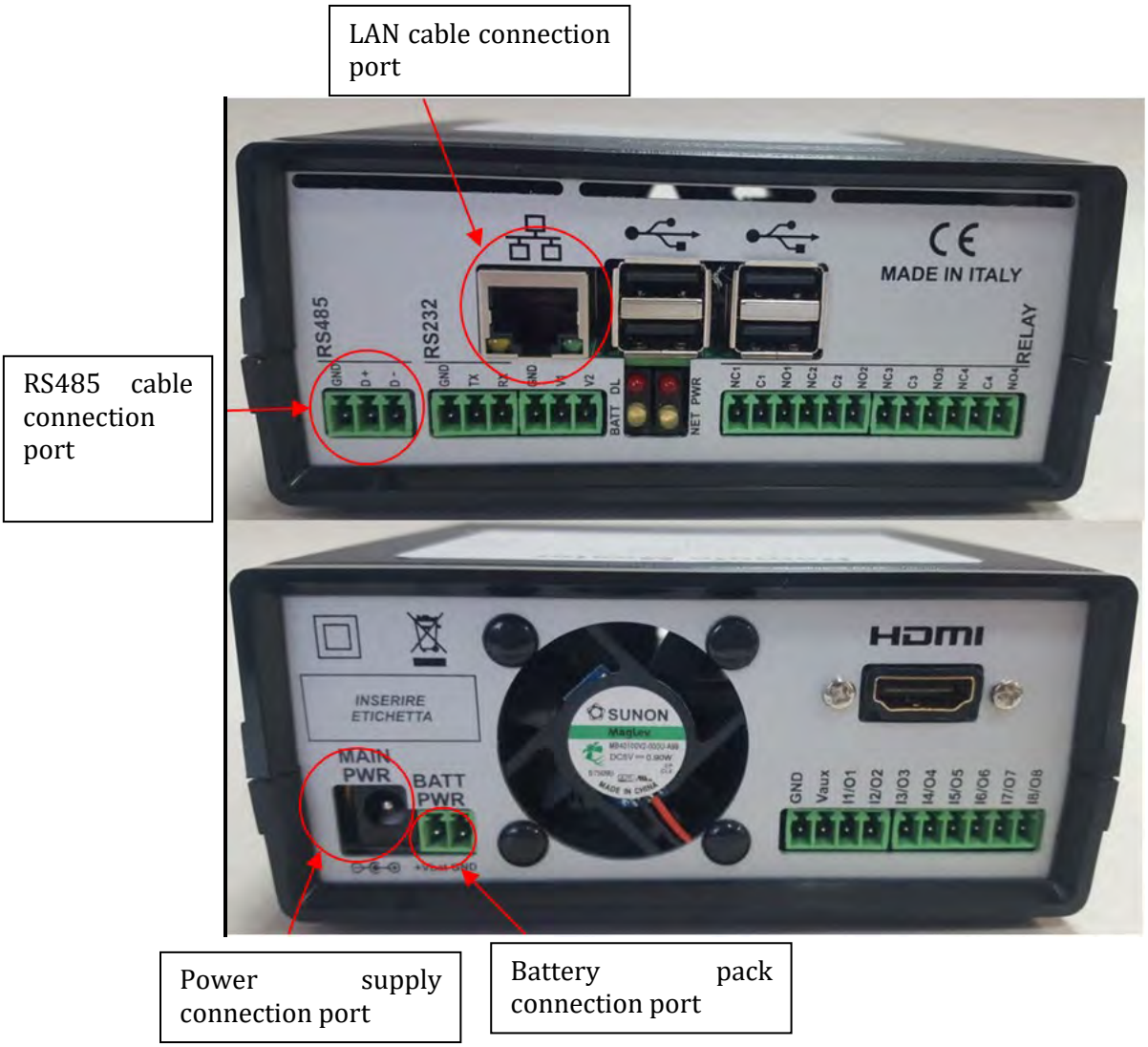

Figure 99: Datalogger rear panel

3.4.7.2. Connecting the Datalogger to the inverters

A serial communication via RS485 cable is provided for connecting to the inverters.
The GND cable does not need to be connected to the inverters. Follow the connections as shown in the table below.

Datalogger SIDE	BUS Signal	SENSOR SIDE (ZSM-IRR-TEMP-LM2)	Inverter SIDE
D+ terminal	+	RS485***+IB*** terminal	***+Tx*** terminal
D– terminal	-	RS485***-IA*** terminal	***-Tx*** terminal

Table 3: Connecting the Datalogger to the inverters

3.4.7.3. Internet connection via Ethernet cable

In order to display the data measured and processed by the Datalogger in the portal, it is necessary to connect to the internet via LAN cable and open the following router ports:

- VPN ports: 22 and 1194
- HTTP ports: 80
- DB ports: 3050
- FTP ports: 20 and 21

The local network of the device is configured for DHCP, and it is not necessary to activate any communication port on the router. If you want to set a fixed network address, this must be provided at the time of ordering together with the gateway address.

3.4.7.4. Connecting the power supply and battery pack to the Datalogger

Once the RS485 Half Duplex cable has been connected, power the Datalogger by connecting the power supply unit (supplied with the datalogger) to the MAIN PWR input (12V DC - 1A).
In order to prevent possible voltage drops and/or power failures, it is recommended to also connect the battery pack, which is supplied with the datalogger. The battery pack should be connected to the $+V_{bat}$ and GND inputs of the BATT PWR connector, positive and negative respectively (i.e. red to the $+V_{bat}$ input and black to the GND input).

The battery pack (ZSM-UPS-001) can be purchased separately.

3.4.7.5. Connecting the LM2-485 PRO cell irradiance and temperature sensor to the datalogger

For proper installation, make sure to connect the sensor signal cable and the power cable.

In particular, the sensor of the signal cables must be connected in a daisy chain configuration to the remaining devices on the RS485 bus, as shown in the table below.

Datalogger SIDE	BUS Signal	SENSOR SIDE (ZSM-IRR-TEMP-LM2)	Inverter SIDE
D+ terminal	+	RS485***+IB*** terminal	***+Tx*** terminal
D– terminal	-	RS485***-IA*** terminal	***-Tx*** terminal

To supply power to the sensor, the datalogger can be directly connected to the mains power, as shown in the table below, or connected to an external +12Vdc power supply.

Datalogger SIDE	SENSOR SIDE
V1 terminal (12Vdc output voltage)	**RED +12V** Terminal
GND terminal (GND/RTN)	**BLACK 0V** Terminal
V2 terminal (12Vdc driveable voltage)	

Table 4: Electrical connection of the sensor to the datalogger (power supply)

A stable communication in terms of signal and power supply, up to 200m, is guaranteed by using the RS485 cable, type Te.Co. 15166 (2x2x0,22+1x0,22)st/pu.
For longer distances, a connection to the signal side of the datalogger is recommended, and a connection to the +12V power supply via an external power supply unit.

3.4.8.Configuring the Datalogger

Connect to the website dlconfig.it and login by entering the temporary credentials: Username = admin and Password = admin.

In the screen that opens, enter the serial number(S/N) of the datalogger to be configured and click "SEARCH".

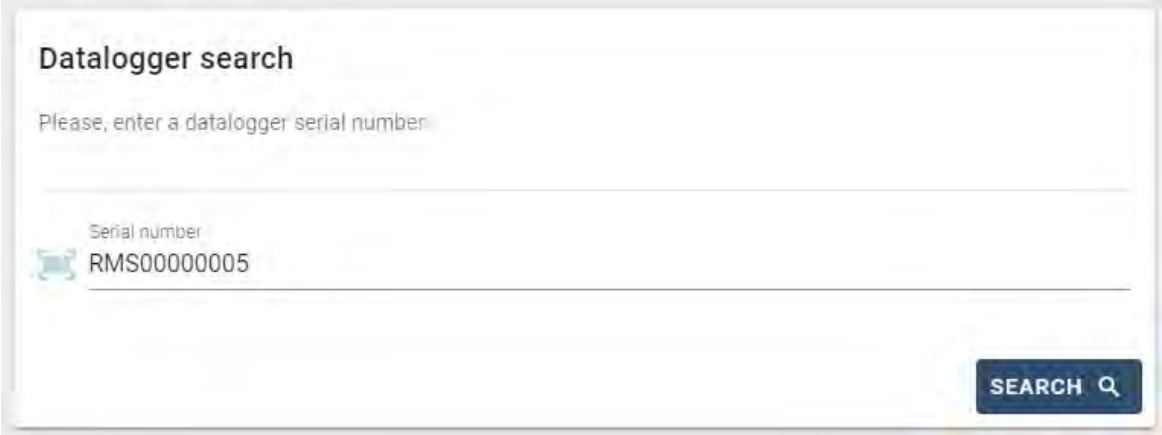

In the configuration page, you can search for any devices connected to the datalogger (inverter, meter or sensors) by clicking the + button, as shown in the figure.

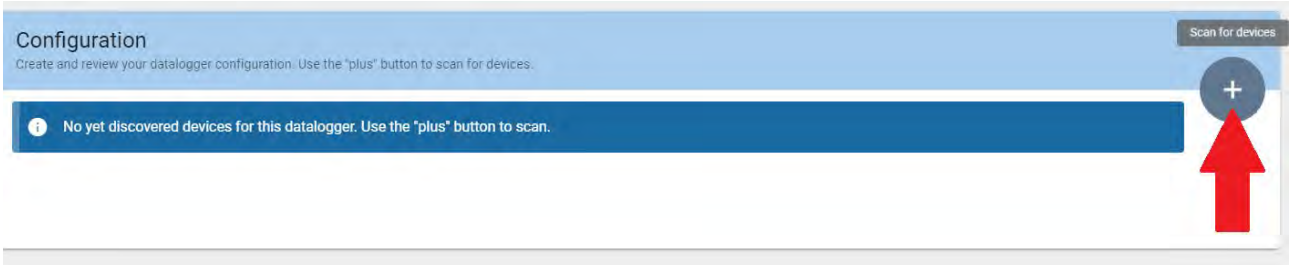

A window will open where you can search for each type of device connected to the Datalogger, after indicating the range of addresses associated with the relative devices.

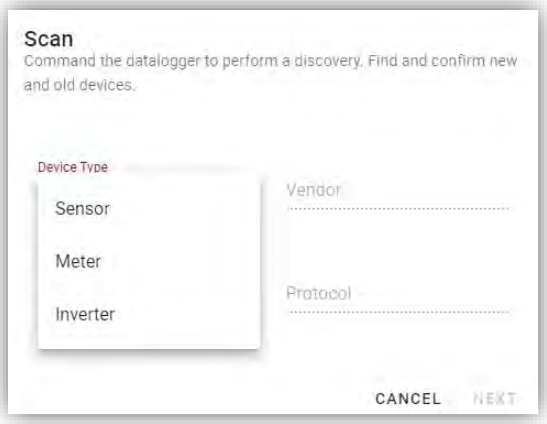

If a meter is one of the devices connected to the Datalogger, select the type of Meter/Datalogger communication interface and the relative communication protocol.

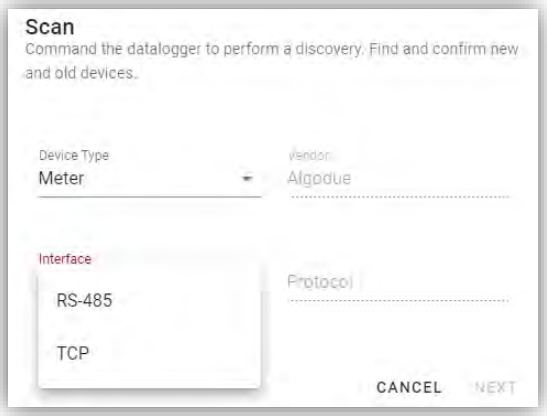

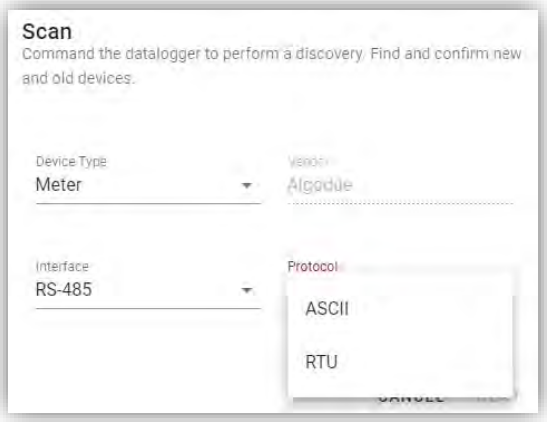

Once this operation has been completed, update the new configuration by clicking "Confirm," which will allow you to register the devices associated with the datalogger.

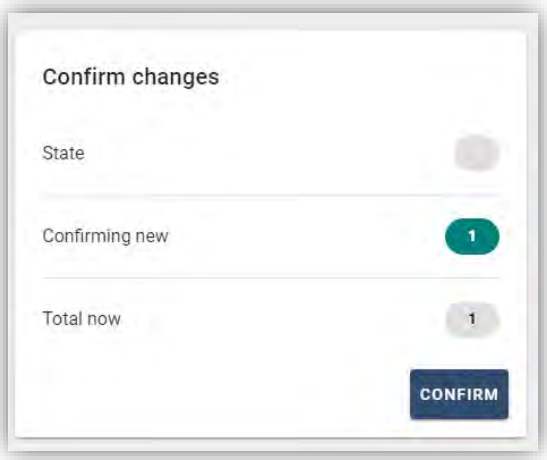

From this moment, the datalogger is correctly configured (all devices must be in the "saved" status) and therefore a new installation can be created on the ZCS Azzurro portal for associating the datalogger and the devices connected to it.

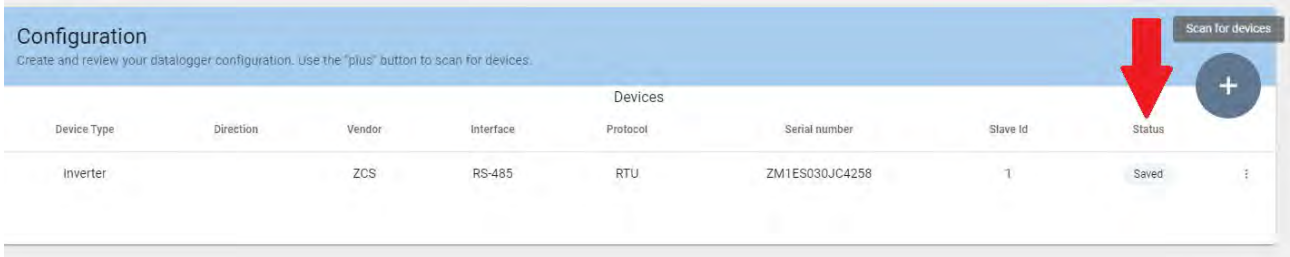

3.4.8.1. Configuring the Datalogger on the ZCS Azzurro portal

Access the ZCS Azzurro portal (https://www.zcsazzurroportal.com). For new users, click "Sign up now" to register on the portal by entering your email, username and password. After logging into the portal, click "Configuration Panel", and then select the option "Create field with Datalogger." The "Create New Field" operation will be possible only if the user's privileges allow acquiring new fields (at the time of registration the limit will be equal to 1, an upgrade is required to increase the limit).

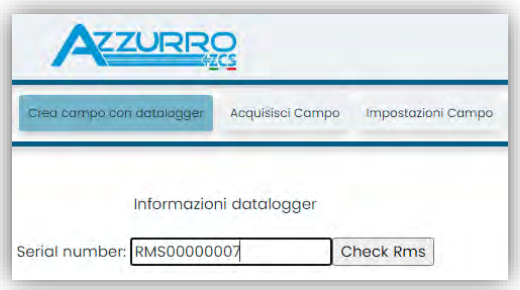

Enter the serial number (S/N) of the datalogger and click "Check RMS". If the datalogger has been configured correctly, a screen will open where you can enter the required information relating to the field to be installed.

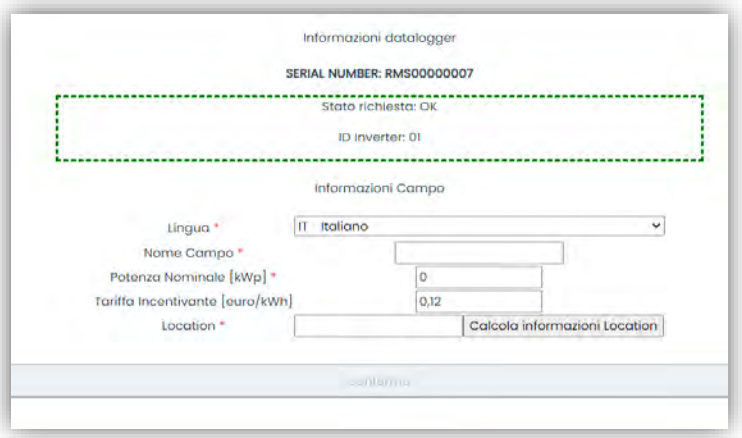

Once the “location” of the field has been entered, click “Calculate Location Information” to allow the system to obtain the latitude, longitude and time zone of the installation. Click “Confirm” to complete the configuration of the field. You only need to wait a few minutes to view the data flow on the ZCS Azzurro portal.

ATTENTION: The location data is essential for the correct operation of the datalogger in the ZCS system. It is important to define it very carefully.

3.4.8.2. Network configuration

At the time of purchase, the Datalogger is configured in DHCP, i.e. dynamic configuration.
However, if you want to set up a static configuration for your Datalogger, you can access the internet page via the link RMSxxxxxxxx: 8888, as shown in the figure (e.g. RMS00000007).

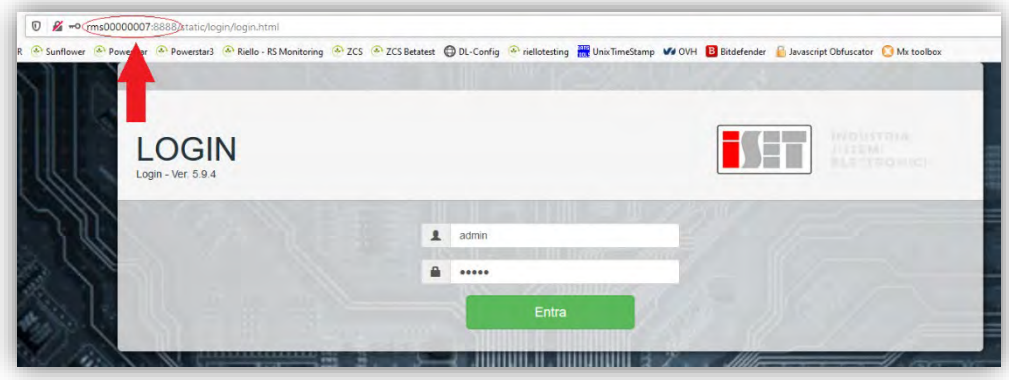

By entering the credentials: username = admin and password = admin, you can change the configuration from dynamic to static by selecting the network window (see blue arrow) and then the “STATIC” option (see green arrow).

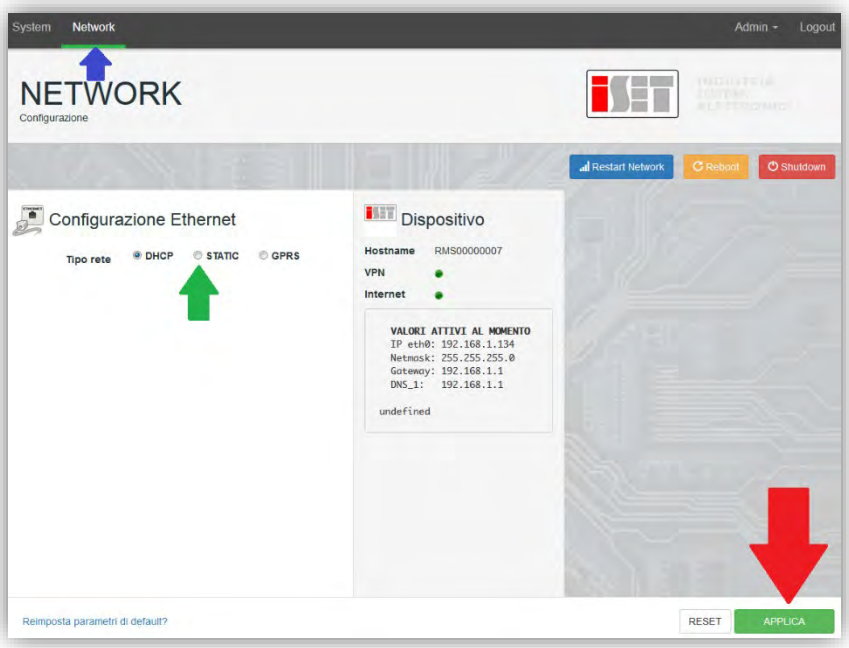

To complete the operation, click "Apply" (see red arrow).

3.4.9.Local monitoring

The datalogger makes it possible to obtain an additional monitoring system (***local monitoring***), which can be used locally on a web page (therefore, also without an internet connection) and accessed from any device present in the same local network as the datalogger.

3.4.9.1. Requirements for installation of local monitoring

In order to install the local monitoring system on the datalogger, the customer must ensure that:

- The datalogger is connected to the local network and to the internet (the internet connection is only required during installation and configuration of the local monitoring system).
- A static address (to be provided by the customer) with gateway and subnet mask is available for viewing the page locally.

3.4.9.2. Features of local monitoring

After installation and configuration, local monitoring makes it possible to monitor the fundamental parameters of the photovoltaic system, even without an internet connection, from any device connected to the same local network.
In particular, it is possible to monitor the power and energy of the inverters and the storage systems over the last 7 days. It is also possible to view alarms, and other information such as temperature, peak daily power, CO_2 gains and savings.
Below is an example of a local monitoring page.

Figure 100: Example of local monitoring page

4. Warranty terms and conditions

To view the Warranty Terms and Conditions" offered by ZCS Azzurro, please refer to the documentation inside the product box and on the website www.zcsazzurro.com.

AZZURRO ZCS

THE INVERTER THAT LOOKS AT THE FUTURE

zcsazzurro.com

ZUCCHETTI Centro Sistemi
GREEN INNOVATION

Zucchetti Centro Sistemi S.p.A.
Green Innovation Division
Palazzo dell'Innovazione - Via Lungarno, 167
52028 Terranuova Bracciolini - Arezzo, Italy
zcscompany.com

ZCS